PRODUCT CATALOG

www.bflc.com.cn

Office Add: 3rd Floor National Center for Crop Germplasm Conservation,
Chinese Academy of Agricultural Sciences,
No. 12 South Zhongguancun Street, Haidian District, Beijing 100081, China.
Factory Add: No.2 Juhe 2nd street, Jufuyuan development zone, Tongzhou District, Beijing.
Tel: 86 10 62149667
Fax: 86 10 82108614
E-mail: market@bflc.cn
Official Website: www.bflc.com.cn
International Business Website: www.wigglewires.com

Version Number: 2019-01

BEIJING FENGLONG
GREENHOUSE
TECHNOLOGY CO., LTD.

Company Profile

Innovation Dedication Reliability Credibility

Beijing Fenglong Greenhouse Technology Co., Ltd. was founded in 1999, our factory is located in the Tongzhou District of Beijing and occupies more than 40,000 square meters. We employ more than 200 people across three R&D centers, three national offices and four distribution centers. We have three main series products, including polymer materials, electromechanical equipments and greenhouse automatic control system. Our products have been exported to more than 64 countries worldwide including Japan, the United States, Israel, and Europe etc.

Beijing Fenglong maintains long-term business alliances with Japan Mitsui Chemicals, Japan KYOWA, Japan C.I. TAKIRON, Institute of Chemistry Chinese Academy of Sciences and Chinese Academy of Agricultural Sciences.

With that, Beijing Fenglong has introduced advanced Japanese production technologies and management concepts, the company has in place a very strict quality control system, certified by ISO9001 quality management system, ISO14001 environmental management system, and GB/T28001 health and safety management, ensure that all the qualified products are strictly inspected and traceable, we believe we can provide better products and services to major domestic and foreign engineering companies and growers.

We are deeply indebted to our customers and suppliers for their continuous support. We are always committed to delivering to our customers the best.

BEIJING FENGLONG
GREENHOUSE
TECHNOLOGY CO., LTD.

www.bflc.com.cn

Contents

01

Greenhouse Covering Film

02) TOYOTANI® Polyethene Film
03) TOYOTANI® Clear Film
04) TOYOTANI® Diffused Film

02

Greenhouse Film Reeler

10) Kingzo® Electric Film Reeler
12) GMD Serials of Kingzo® Electric Film Reeler
20) GMA Serials of Kingzo® Electric Film Reeler
27) Application and Instruction of Kingzo® Electric Film Reeler
32) FLC® Guiding Bracket
35) Controller Product
39) FLC®/ TANIKANKIT® Manual Film Reeler
41) Product Introduction of Manual Film Reeler

03

Wiggle Wire/ Wiggle Wire Channel

50) VINIPET® Wiggle Wire
52) VINIPET® B6-23 Wiggle Wire
53) VINIPET® B6B Wiggle Wire
54) VINIPET® B5-20 Wiggle Wire
55) VINIPET® B5B Wiggle Wire
57) LOCKUP® Wiggle Wire Channel
58) LOCKUP® Swaged Wiggle Wire Channel
59) LOCKUP® Aluminum Wiggle Wire Channel

04

Greenhouse Ventilation and Shading

62) Continuous Rack and Pinion Vent System
62) A Type Rack and Pinion Curtaining System
63) B Type Rack and Pinion Curtaining System
64) Cable Driving Shading System

65) 3GG® Gear Motor
67) KINGZO® Gear Motor for Ventilation
68) KINGZO® Gear Motor for Curtaining
70) KINGZO® 250W Gear Motor

71) Accessories for Continuous Rack and Pinion Vent System
73) Accessories for A Type Rack and Pinion Curtaining System
76) Accessories for B Type Rack and Pinion Curtaining System
79) Accessories for Cable Driving Shading System
81) Accessories for Economical Shading System
84) General Accessories for Curtaining System

05

Venting Products

87) KOOL MAX® Electric Easy Wind
88) KOOL MAX® Manual Easy Wind
89) KOOL MAX® Electric Easy Wind for Livestock
90) FLC® Circulation Fan
92) FLC® Inflation Blower

06

Other Products

95) Greenhouse Special Accessories

01

Greenhouse Covering Film

TOYOTANI® Polyethene Film

TOYOTANI® Clear Film

TOYOTANI® Diffused Film

TOYOTANI® Polyethene Film

Japanese Technology, Fenglong Product, Global Service

TOYOTANI® Polyethene Film Introduction

TOYOTANI® Poly Film Workshop

Beijing Fenglong maintains long-term business alliances with Japan Mitsui Chemicals, Japan KYOWA, Japan C.I. TAKIRON, Institute of Chemistry Chinese Academy of Sciences and Chinese Academy of Agricultural Sciences. TOYOTANI® Polyethene film uses advanced Japanese Mitsui Technology and unique formulation. It is multi-layer film, the efficient functional additives are added into different layer. The top layer, which is facing the sky, is for anti-static and UV Stabilization, middle layers are for IR or Thermic and the inner layer, which is facing the plants, is mainly for the anti-mist and anti-drip.

TOYOTANI® Polyethene Film, accurate thickness, no recycling material, adding the Metallocene with higher proportion to make sure the film has high light transmission and tensile strength. We complete them in Tongzhou Factory from the materials production to finished goods. We test every batch of film with imported Q-Lab QUV Spray (USA) to ensure the quality consistency.

TOYOTANI® Polyethene Film

Crystal Clear/ High Strength/ Better Thermicity/ Anti-Drip& Anti-Mist/ Long Duration

01

2/Features of TOYOTANI® Clear Film

- Crystal Clear

  Superior performance of transparency, light transmission rate is over 90%, the higher transmission rate ensure adequate lights, which can be absorbed by plants.

- High Strength

  Better impact resistance, high resistance to thermal expansion or contraction, enhanced loading capacity.

- Better Thermicity

  Including Ethylene Vynil Acetate in the mixture in high quantities (EVA), using of Mineral Additives and Synthetic IR additives, the IR additives absorb most of the longwave IR radiation from the greenhouse, reducing heat loss, improving the film thermicity.

- Anti-Drip& Anti-Mist

  Anti-Drip additives reduce surface tension of condensing water vapor and raise the surface tension of the inner side of plastic.

- Long Duration

  Temperature-resistant, Cold-resistant, UV Stabilization, Cost Effective.

TOYOTANI® Diffused Film

High Yield/ Enhanced color/ Crystal Clear/ Insolation Prevented

3/TOYOTANI® Diffused Film Introduction

The incident light can reach the plant as “direct” radiation (waves moving parallel to one another) or as “Diffused” radiation (in which the light waves are moving along trajectories which are at various angles with respect to one another and to a horizontal plane).

Diffused film has an advantage over clear film. Diffused light does not allow the shadow formation of the top layers of leaves to prevent essential light from reaching the lower leaves. The end result is the facilitation of an effective dispersion of total light to the darker areas inside the plant volume enhancing photosynthesis and hence the production of biomass. （As Figure 1）

Figure 1

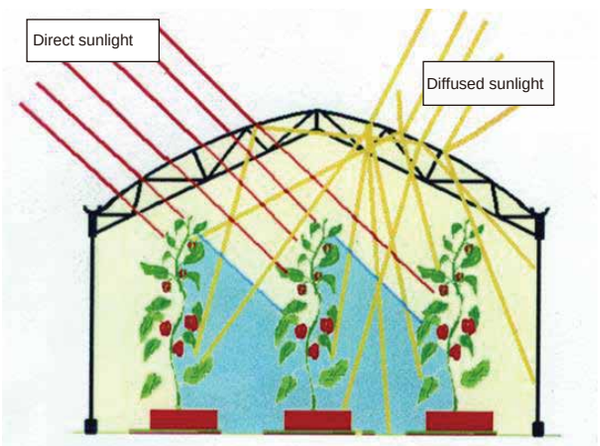

Figure 2

The Crops under regular film

The Crops under diffused film

Why choose diffused film:

- The diffused film is very popular all over the world, which is widely used in France, Spain, Israel, Turkey, Australia, African countries etc., because the diffused film with uniform distribution of light is good for the plant’s photosynthesis.

  It is proved by experiments that, regardless of planting cucumber, tomato, or flowers, the diffused film can increase the yield of them.
- The increased yield percentage is as follows: Cucumber(4-10%), Tomato(8-10%), Mixed Sweet Pepper(5%), Anthurium (25%). This increased yield is caused by the lights of diffused film, the diffusion lights are going to all parts of plant, making the photosynthesis more sufficient.

Figure 3

4/Properties of TOYOTANI® Clear Film

Product Code	Mode	Thickness (mm)	Light Transmission	Anti-Drip	Anti-Mist	Duration	Tensile Strength At Break	Elongation At Break	Tear Resistance	Width (m)
100164400010	TM290A	0.06	≥91%	Excellent	Excellent	14 months	≥30Mpa	≥550% ≥650%	≥90KN/m	5m,6m, 7m,8m, 8.5m, 9m, 9.5m, 10m, 11m, 12m
100164300010	TM390A	0.08	≥91%	Excellent	Excellent	18 months	≥30Mpa	≥550% ≥650%	≥90KN/m	
100130200010	TM490C	0.10	≥90%	Excellent	Excellent	24 months	≥30Mpa	≥550% ≥650%	≥90KN/m	
100131200010	TM590E	0.12	≥90%	Excellent	Excellent	36 months	≥26Mpa	≥550% ≥650%	≥90KN/m	
100132200010	TM690H	0.15	≥90%	Excellent	Excellent	48 months	≥26Mpa	≥550% ≥650%	≥90KN/m	
100163400010	TM890J	0.20	≥88%	Excellent	Excellent	60 months	≥26Mpa	≥550% ≥650%	≥90KN/m	
Note: Other widths are available according to request.										

5/Properties of TOYOTANI® Diffused Film

Product Code	Mode	Thickness (mm)	Light Transmission	Light Diffusion	Anti-Drip	Anti-Mist	Duration	Tensile Strength At Break	Elongation At Break	Tear Resistance	Width (m)
100164800010	CM392A	0.07	≥90%	≥30%	Excellent	Excellent	16 months	≥32Mpa	≥550% ≥650%	≥100KN/m ≥100KN/m	5m,6m, 7m,8m, 8.5m, 9m, 9.5m, 10m, 11m, 12m
100164500010	CM493C	0.10	≥90%	≥50%	Excellent	Excellent	24 months	≥25Mpa	≥550% ≥650%	≥100KN/m ≥90KN/m	
100164600010	CM594E	0.12	≥90%	≥50%	Excellent	Excellent	36 months	≥25Mpa	≥550% ≥650%	≥100KN/m ≥90KN/m	
100164100010	CM686H	0.15	≥89%	≥50%	Excellent	Excellent	48 months	≥25Mpa	≥550% ≥650%	≥100KN/m ≥90KN/m	
100163300010	CM886J	0.20	≥89%	≥50%	Excellent	Excellent	60 months	≥25Mpa	≥550% ≥650%	≥90KN/m ≥90KN/m	
Note: Diffusion rate higher than 70% could also be customized. Other widths are available according to request.											

6/Testing Report

Film Testing Report of 0.10mm, 0.15mm and 0.20mm

7/Advantages of TOYOTANI® Clear Film/ TOYOTANI® Diffused Film

- 100% virgin raw material, The content of Metallocene is much higher than that of similar products, high light transmission(≥90%), high tensile strength, high rigidity.
- The additive quality of Light Stabilizer is twice more than the normal film, to keep the TOYOTANI® film longer duration.
- Advanced Japanese Mitsui Technology, Anti-Drip additives reduce surface tension of condensing water vapor and raise the surface tension of the inner side of plastic.

Enhanced Strength

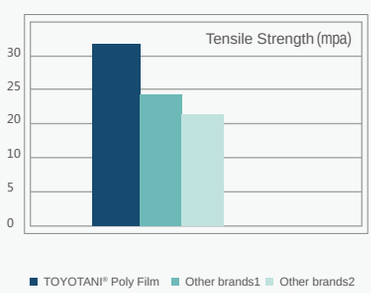

High Light Transmission

Time-varying table of attenuating of transmission rate

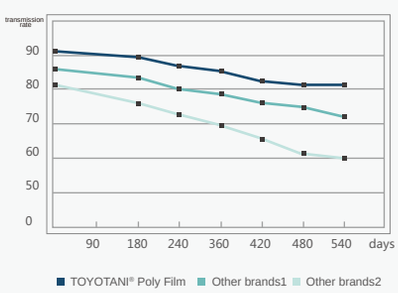

Longer Duration

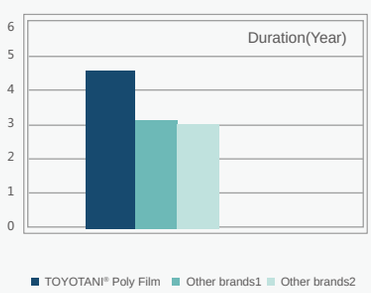

8/Film Selection, the Dos and Don'ts

- The area, with big temperature difference between day and night, is suitable for the high-thermicity and high-transmission film.
- The area with strong sunshine is suitable for the high diffusion film.
- The function of two sides of the film is different, please install the film according to the prints and labels.
- The installation of the film in summer should be moderately loose, in case of breaking caused by the fall of temperature.
- The installation of the film in winter should be moderately tight, in case of water accumulating which is caused by the increasing temperature in the next summer(the increasing temperature will cause the film extended), so please keep the film in 2 or 3 days at the indoor temperature before installing.
- Do not spray the chemicals onto the film, and also do not use the Sulfur Burner inside the greenhouse, because this will accelerate the aging process.
- Avoid direct touching with the plants, equipment of irrigation and heater, etc.
- Store the film in a dry shading place within 6 months before installing.

9/Proper Installation Instructions

The side with logo of TOYOTANI® must be facing the sky.

Another side without logo of TOYOTANI® must be facing the plants.

10/Use Cases

Model：0.15mm TOYOTANI® Clear Film
Location: North America
Installation Date: Dec. 2013
Time of Shooting: Dec. 2017

Model：0.20mm TOYOTANI® Clear Film
Location: Thailand
Installation Date: Oct. 2014
Time of Shooting: Aug. 2016

Model：0.15mm TOYOTANI® Clear Film
Location: Kenya
Installation Date: Sep. 2013
Time of Shooting: Nov. 2016

Model：0.20mm TOYOTANI®
Diffused Film
Location: Australia
Installation Date: May. 2014
Time of Shooting: Jun. 2017

Model：0.20mm TOYOTANI®
Diffused Film
Location: Caribbean Region
Installation Date: Jun. 2015
Time of Shooting: Apr. 2018

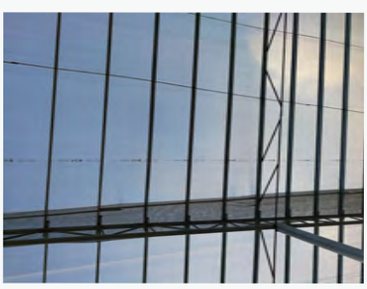

Model：0.15mm TOYOTANI®
Diffused Film
Location: Vietnam
Installation Date: Feb. 2014
Time of Shooting: Nov. 2017

Model：0.15mm TOYOTANI®
Diffused Film
Location: South Africa
Installation Date: Aug. 2016
Time of Shooting: Feb. 2018

Model：0.15mm TOYOTANI®
Clear Film
Location: China
Installation Date: Mar. 2016
Time of Shooting: Dec. 2017

Model：0.15mm TOYOTANI®
Diffused Film
Location: Malaysia
Installation Date: May. 2015
Time of Shooting: Feb. 2018

02

Greenhouse Film Reeler

02

Kingzo® Electric Film Reeler

1. GMD Series Kingzo® Electric Film Reeler
2. GMA Series Kingzo® Electric Film Reeler
3. Application and Instruction of Kingzo® Film Reeler

Accessories of Kingzo® Film Reeler

1. FLC® Guiding Bracket
2. Controller of Electric Film Reeler

FLC®/ TANIKANKIT® Manual Film Reeler

1. Product Introduction of FLC®/ TANIKANKIT® Manual Film Reeler

KINGZO®Electric Film Reeler

1/ GMD Series Kingzo® Electric Film Reeler(DC24V)

- GMD40-S

- GMD60-S

- GMD100-S
  GMD100-S-K

- GMD100-S-A1

- GMD120-D
  GMD120-D-12

- GMD180-S

2/GMA Series Kingzo® Electric Film Reeler(AC220V)

- GMA40-S

- GMA60-S

- GMA100-S

- GMA100-S-K

- GMA100-S-A1

- GMA120-D
  GMA120-D-12

3/Parameter Sheet for KINGZO® Electric Film Reeler

Product Code	Model	Voltage	Power	Torque	Current	RPM	Rolling Distance	Rolling Length	Output Shaft Diameter	Rolling Pipe-OD	Weight	Guarantee
110419700010	GMD40-S	DC24V	40W	45N·m	≤3.0A	3.1r/min	4m	≤65m	Φ20	Φ22 or Φ27.5	2.6kg	3 years
110415400010	GMD60-S	DC24V	60W	60N·m	≤3.7A	2.8r/min	4m	≤85m	Φ20	Φ27.5 or Φ33.5	3.4kg	3 years
110415500010	GMD100-S	DC24V	100W	100N·m	≤6.2A	2.8r/min	4m	≤100m	Φ20	Φ27.5 or Φ33.5	3.6kg	3 years
110413100010	GMD100-S-K	DC24V	100W	100N·m	≤6.2A	2.8r/min	8m	≤100m	Φ20	Φ27.5 or Φ33.5	3.6kg	3 years
110415600010	GMD100-S-A1	DC24V	100W	100N·m	≤6.2A	2.8r/min	4m	≤100m	Φ20	Φ27.5 or Φ33.5	3.7kg	3 years
110415700010	GMD120-D	DC24V	120W	140N·m	≤7.5A	2.7r/min	4m	≤120m	Φ20	Φ27.5 or Φ33..5	5.6kg	3 years
110413200010	GMD180-S	DC24V	180W	180N·m	≤13.5A	3.3r/min	4m	≤120m	Φ22	Φ27.5 or Φ33.5	6.0kg	3 years
110419800010	GMA40-S	AC220V	40W	45N·m	≤0.35A	3.4r/min	4m	≤65m	Φ20	Φ22 or Φ27.5	2.7kg	3 years
110416000010	GMA60-S	AC220V	60W	60N·m	≤0.46A	2.8r/min	4m	≤85m	Φ20	Φ27.5 or Φ33.5	3.5kg	3 years
110416100010	GMA100-S	AC220V	100W	100N·m	≤0.77A	2.8r/min	4m	≤100m	Φ20	Φ27.5 or Φ33.5	3.7kg	3 years
110413000010	GMA100-S-K	AC220V	100W	100N·m	≤0.77A	2.8r/min	8m	≤100m	Φ20	Φ27.5 or Φ33.5	3.7kg	3 years
110419100010	GMA120-S-A1	AC220V	120W	120N·m	≤0.90A	2.5r/min	4m	≤100m	Φ20	Φ27.5 or Φ33.5	4.4kg	3 years
110411100010	GMA120-D	AC220V	120W	120N·m	≤0.88A	2.7r/min	4m	≤120m	Φ20	Φ27.5 or Φ33.5	5.4kg	3 years

Note: The distance of 4 meters is 38 rotation, and 8 meters is 80 rotation.

Product Code	Model	Voltage	Power	Max Rotations	Brake Distance	Torque	RPM	Weight	Guarantee
110421100010	GMD120-D-12	DC24V	120W	12r	≤10mm	140N·m	2.7r/min	5.6kg	3 years
110421200010	GMA120-D-12	AC220V	120W	12r	≤10mm	140N·m	2.7r/min	5.6kg	3 years

Note: The 12-rotation electrical reeler is specially used for small area windows ventilation.

4/Model Naming Demostration

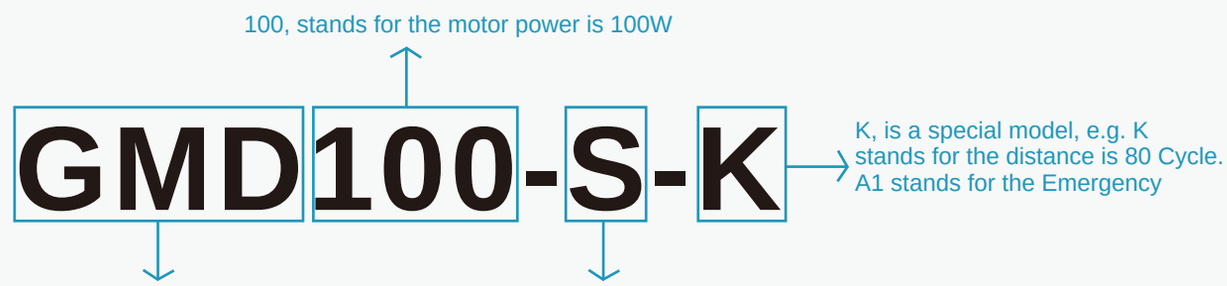

GMD Series
KINGZO® Electric Film Reeler

1/ KINGZO® Electric Film Reeler GMD40-S

Product Description

- Low noise, big torque;
- Double limit switch protection;
- Accurate limit switch and reliable self-locking property;
- Three water drain holes of anti-condensation added to protect the safety of circuit diagram, Protection Grade: IP55;
- Reinforced output shaft;
- Providing 5 meters long external electric cable for easy connection to the control box;
- 3 years quality guarantee.

Product Code	Model	Voltage	Power	Torque	Current	RPM	Rolling Height	Rolling Length	Output Shaft Diameter	Rolling Pipe-OD	Weight	Guarantee
110415300010	GMD40-S	DC24V	40W	45N·m	≤3.0A	3.1r/min	4m	≤65m	Φ20	Φ22 or Φ27.5	2.6kg	3 years

Dimensional Drawing of KINGZO® Electric Film Reeler GMD40-S

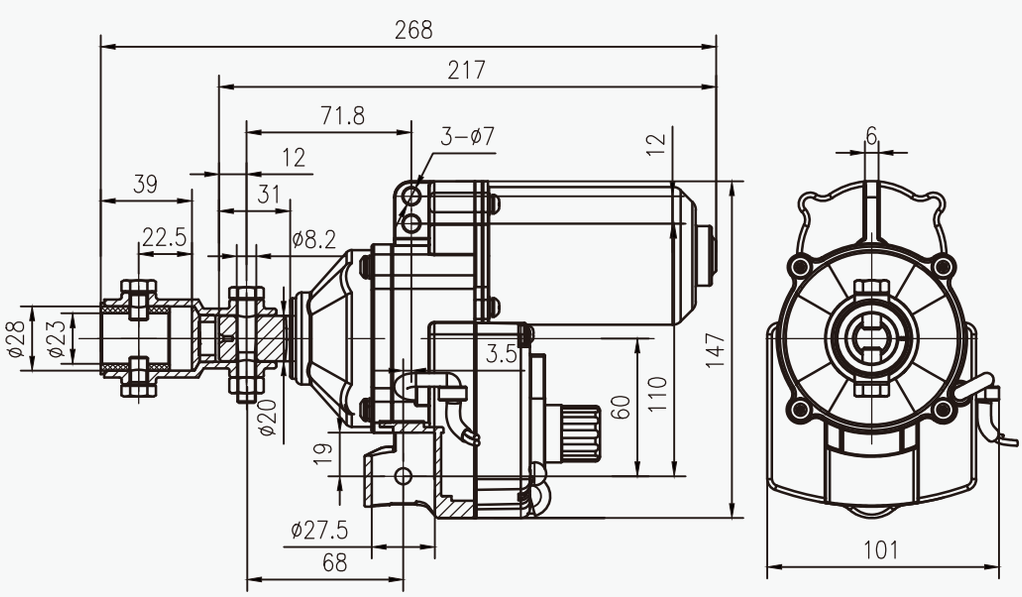

2/KINGZO® Electric Film Reeler GMD60-S

Product Description

- Low noise, big torque;
- Double limit switch protection;
- Accurate limit switch and reliable self-locking property;
- Three water drain holes of anti-condensation added to protect the safety of circuit diagram, Protection Grade: IP55;
- Reinforced output shaft;
- Providing 5 meters long external electric cable for easy connection to the control box;
- 3 years quality guarantee.

Product Code	Model	Voltage	Power	Torque	Current	RPM	Rolling Height	Rolling Length	Output Shaft Diameter	Rolling Pipe-OD	Weight	Guarantee
110415400010	GMD60-S	DC24V	60W	60N·m	≤3.7A	2.8r/min	4m	≤85m	Φ20	Φ27.5orΦ33.5	3.4kg	3 years

Dimensional Drawing of KINGZO® Electric Film Reeler GMD60-S

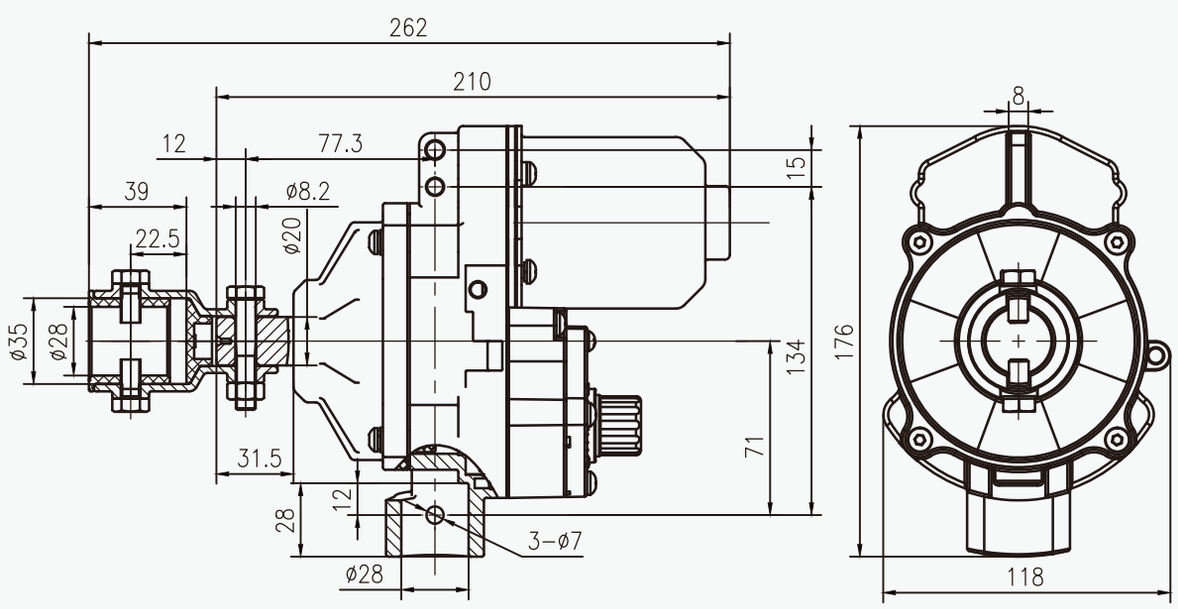

3/KINGZO® Electric Film Reeler GMD100-S

Product Description

- Low noise, big torque;
- Double limit switch protection;
- Accurate limit switch and reliable self-locking property;
- Three water drain holes of anti-condensation added to protect the safety of circuit diagram, Protection Grade: IP55;
- Reinforced output shaft;
- Providing 5 meters long external electric cable for easy connection to the control box;
- 3 years quality guarantee.

Product Code	Model	Voltage	Power	Torque	Current	RPM	Rolling Height	Rolling Length	Output Shaft Diameter	Rolling Pipe-OD	Weight	Guarantee
110415500010	GMD100-S	DC24V	100W	100N•m	≤6.2A	2.8r/min	4m	≤100m	Φ20	Φ27.5orΦ33.5	3.6kg	3 years

Dimensional Drawing of KINGZO® Electric Film Reeler GMD100-S

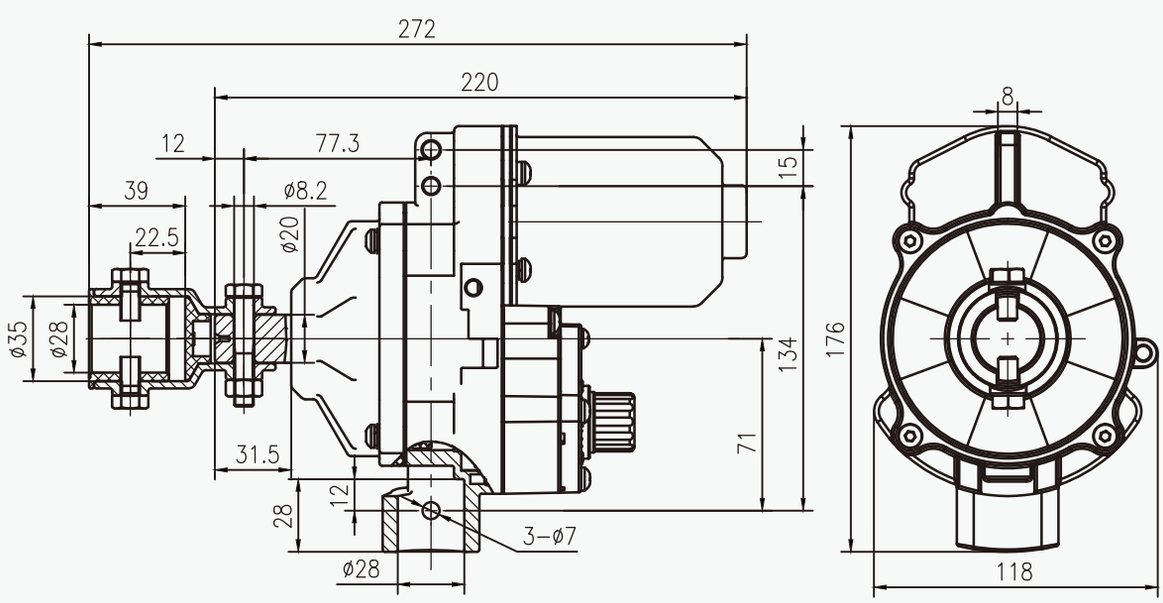

4/KINGZO® Electric Film Reeler GMD100-S-K

Product Description

- Longer rolling height, 8 meters;
- Double limit switch protection;
- Accurate limit switch and reliable self-locking property;
- Three water drain holes of anti-condensation added to protect the safety of circuit diagram, Protection Grade: IP55;
- Reinforced output shaft;
- Providing 5 meters long external electric cable for easy connection to the control box;
- 3 years quality guarantee.

Product Code	Model	Voltage	Power	Torque	Current	RPM	Rolling Height	Rolling Length	Output Shaft Diameter	Rolling Pipe-OD	Weight	Guarantee
110413100010	GMD100-S-K	DC24V	100W	100N·m	≤6.2A	2.8r/min	8m	≤100m	Φ20	Φ27.5orΦ33.5	3.6kg	3 years

Dimensional Drawing of KINGZO® Electric Film Reeler GMD100-S-K

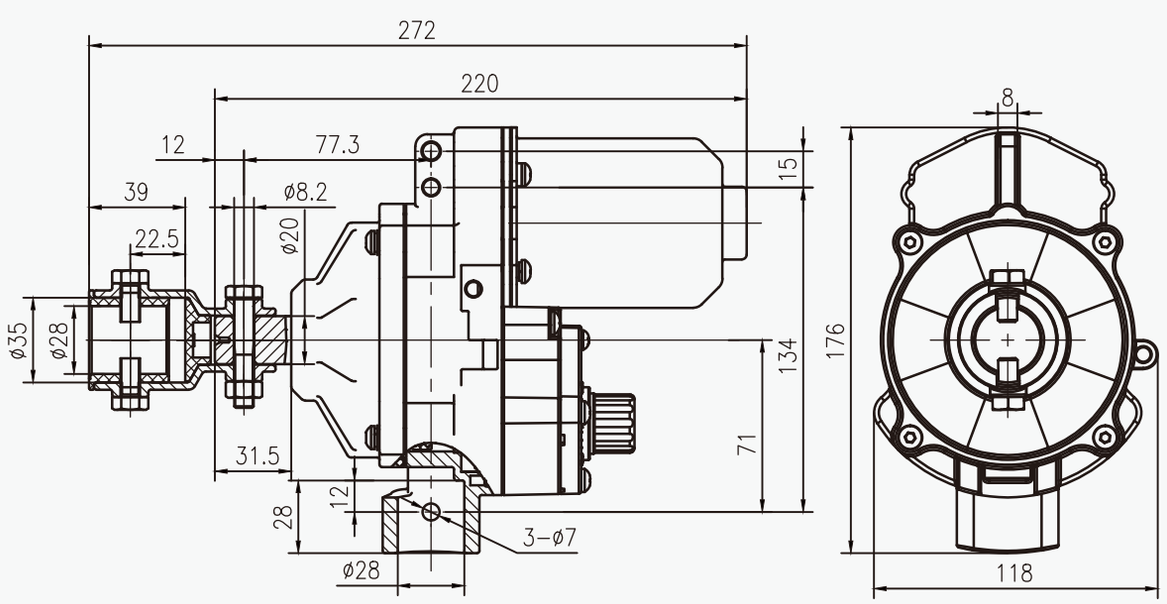

5/KINGZO® Electric Film Reeler GMD100-S-A1

Product Description

- Manual rolling function, working during power failure;
- Double limit switch protection;
- Accurate limit switch and reliable self-locking property;
- Three water drain holes of anti-condensation added to protect the safety of circuit diagram, Protection Grade: IP55;
- Reinforced output shaft;
- Providing 5 meters long external electric cable for easy connection to the control box;
- 3 years quality guarantee.

Product Code	Model	Voltage	Power	Torque	Current	RPM	Rolling Height	Rolling Length	Output Shaft Diameter	Rolling Pipe-OD	Weight	Guarantee
110415600010	GMD100-S-A1	DC24V	100W	100N·m	≤6.2A	2.8r/min	4m	≤100m	Φ20	Φ27.5orΦ33.5	3.7kg	3 years

Dimensional Drawing of KINGZO® Electric Film Reeler GMD100-S-A1

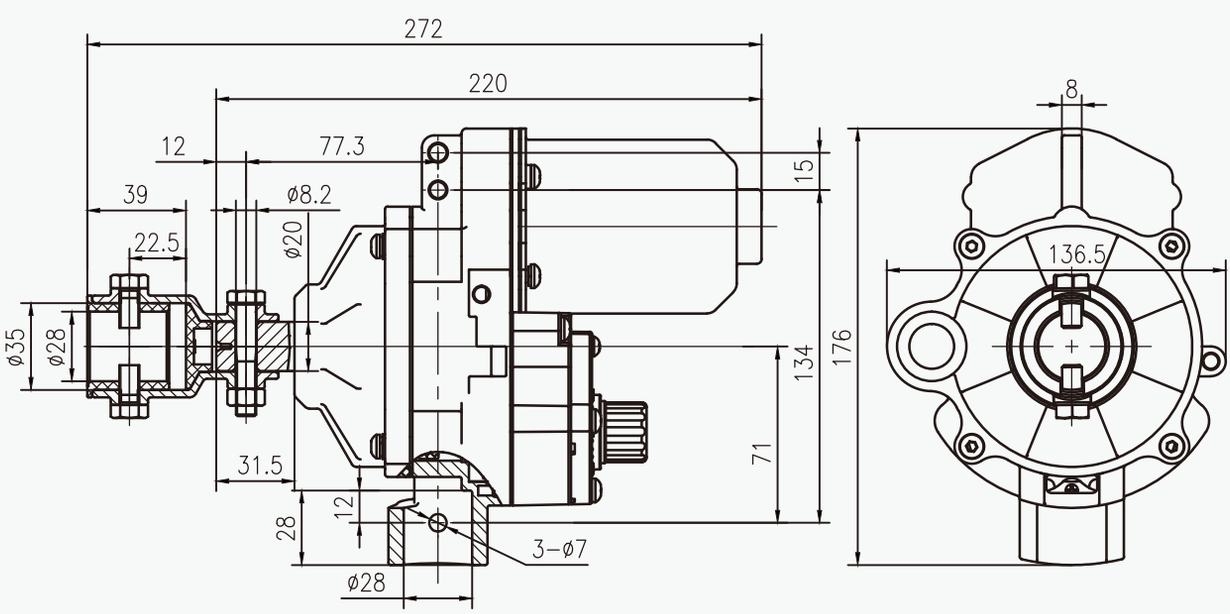

6/KINGZO® Electric Film Reeler GMD120-D

Product Description:

- Dual output shafts;
- Prevent leaning due to the long rolling tube;
- Big torque, rolling more film, lower cost;
- Three water drain holes of anti-condensation added to protect the safety of circuit diagram, Protection Grade: IP55;
- Providing 5 meters long external electric wire for easy connection to the control box;
- 3 years quality guarantee.

Product Code	Model	Voltage	Power	Torque	Current	RPM	Rolling Height	Rolling Length	Output Shaft Diameter	Rolling Pipe-OD	Weight	Guarantee
110412800010	GMD120-D	DC24V	120W	140N·m	≤7.5A	2.7r/min	4m	≤110m	Φ20	Φ27.5orΦ33.5	5.6kg	3 years

Dimensional Drawing of KINGZO® Electric Film Reeler GMD120-D

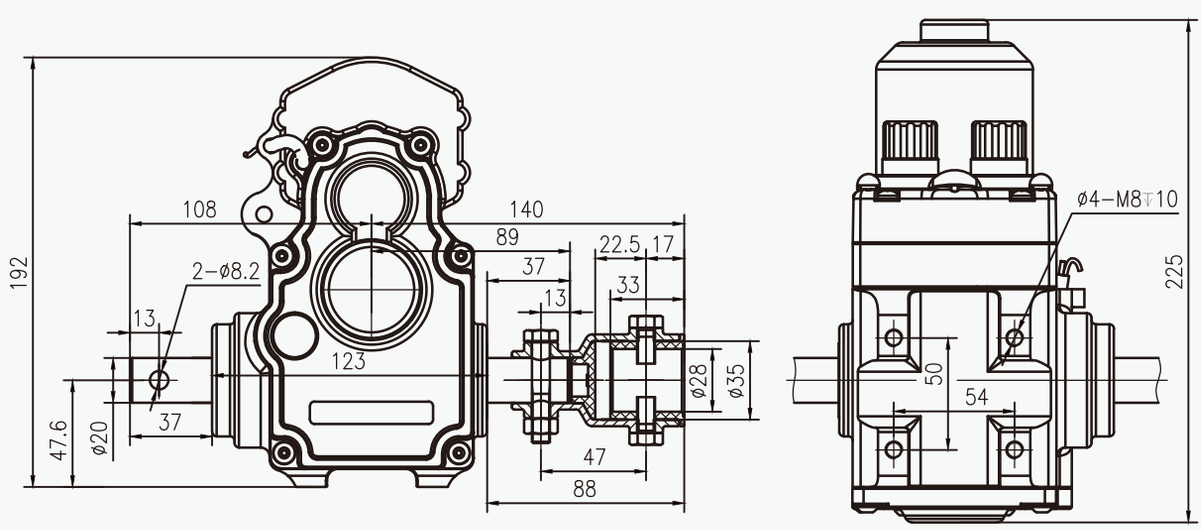

7/KINGZO® Electric Film Reeler GMD120-D-12

Product Description:

- Specially designed for small area windows ventilation to replace big power gear motor;
- High control accuracy and high repeat accuracy;
- Braking distance less than 10mm;
- The simple limit control device;
- With drainage holes, Protection Grade: IP55;
- 3 years quality guarantee.

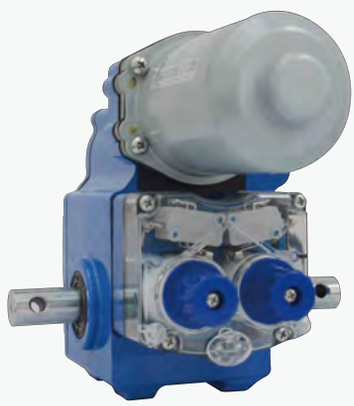

Product code	Model	Voltage	Power	Max Rotations	Brake Distance	Output Torque	RPM	Weight	Guarantee
110421100010	GMD120-D-12	DC24V	120W	12r	≤10mm	140N·m	2.7r/min	5.6kg	3 years

Windows Ventilation Area (for reference only)

Glass windows (Alum frame and glass thickness 4mm)				**Film windows** (Including double layers/100mm pc board/ alum frame)			
Width B/m	length L/m	rack length Ls/m	pinion diameter /mm	Width B/m	length L/m	rack length Ls/m	pinion diameter /mm
1.2	22	1.2 (Curved)	44	1.2	35	1.2 (Curved)	44
1.4	18	1.4 (Curved)	44	1.4	30	1.4 (Curved)	44
1.6	15	1.6 (Curved)	44	1.6	25	1.6 (Curved)	44

Dimensional Drawing of KINGZO® Electric Film Reeler GMD120-D-12

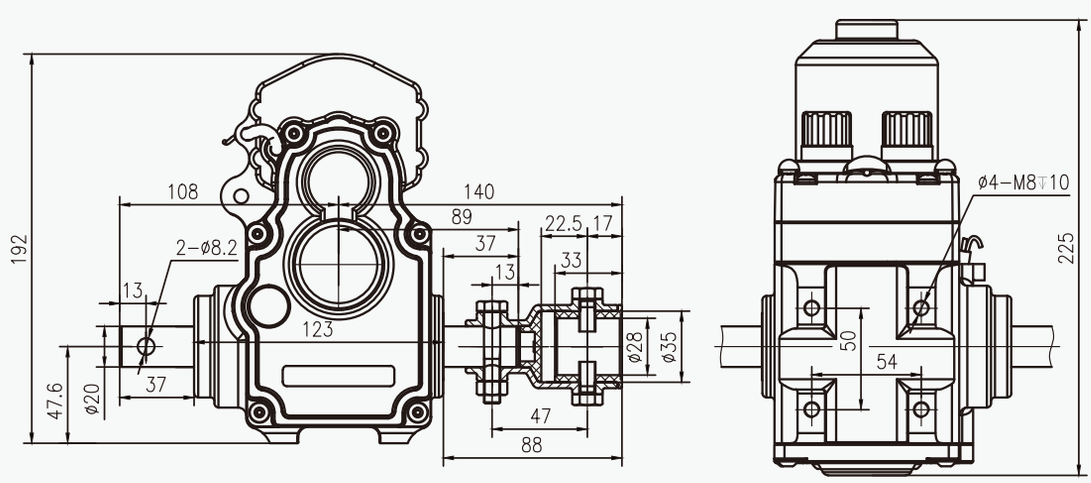

8/KINGZO® Electric Film Reeler GMD180-S

Product Description:

- Low noise, big torque;
- Double limit switch protection;
- Accurate limit switch and reliable self-locking property;
- Three water drain holes of anti-condensation added to protect the safety of circuit diagram, Protection Grade: IP55;
- Reinforced output shaft;
- Providing 5 meters long external electric cable for easy connection to the control box;
- 3 years quality guarantee.

Product Code	Model	Voltage	Power	Torque	Current	RPM	Rolling Height	Rolling Length	Output Shaft Diameter	Rolling Pipe-OD	Weight	Guarantee
110413200010	GMD180-S	DC24V	180W	180N·m	≤13.5A	3.3r/min	4m	≤120m	Φ22	Φ27.5orΦ33.5	6.0kg	3 years

Dimensional Drawing of KINGZO® Electric Film Reeler GMD180-S

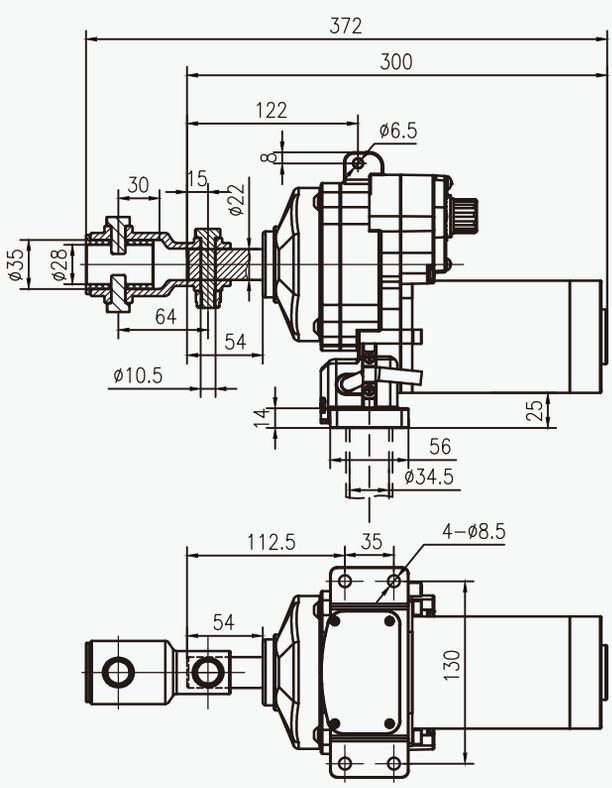

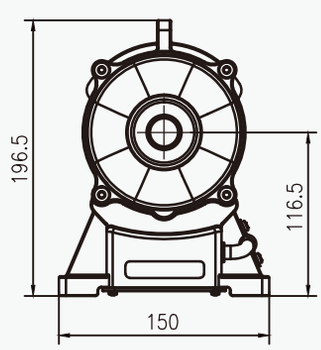

GMA Series
KINGZO® Electric Film Reeler

1/KINGZO® Electric Film Reeler GMA40-S

Product Description

- Prevent damage if the wire is accidentally connected in wrong way, prevent accidental overload;
- Reinforced output shaft;
- Low noise, big torque;
- Accurate limit switch and reliable self-locking property;
- Powered by AC220V/AC110V , no need transformer, more convenient to install, lower cost;
- Providing 3 meters long external electric cable for easy connection to the control box;
- Three water drain holes of anti-condensation added to protect the safety of the circuit diagram, Protection Grade: IP55;
- 3 years quality guarantee.

Product Code	Model	Voltage	Power	Torque	Current	RPM	Rolling Distance	Rolling Length	Output Shaft Diameter	Rolling Pipe-OD	Weight	Guarantee
110415900010	GMA40-S-Ⅱ	AC220V	40W	45N·m	≤0.35A	3.4r/min	4m	≤65m	Φ20	Φ22orΦ27.5	2.7kg	3 years

Dimensional Drawing of KINGZO® Electric Film Reeler GMA40-S

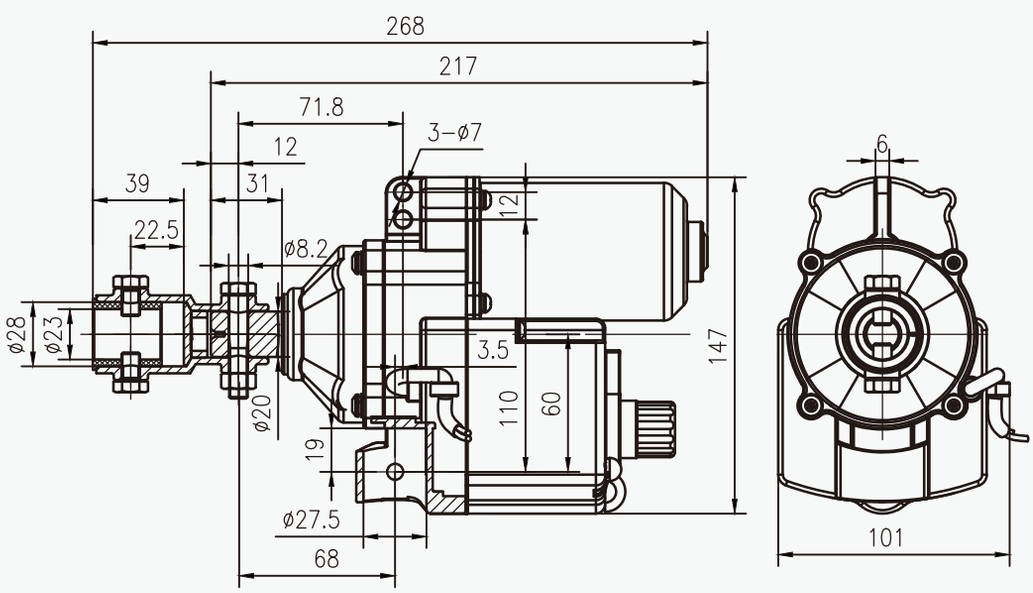

2/KINGZO® Electric Film Reeler GMA60-S

Product Description

- Prevent damage if the wire is accidentally connected in wrong way, prevent accidental overload;
- Reinforced output shaft;
- Low noise, big torque;
- Accurate limit switch and reliable self-locking property;
- Powered by AC220V/AC110V, no need transformer, more convenient to install, lower cost;
- Three water drain holes of anti-condensation added to protect the safety of circuit diagram, Protection Grade: IP55;
- Reinforced output shaft;
- Providing 3 meters long external electric cable for easy connection to the control box;
- 3 years quality guarantee.

Product Code	Model	Voltage	Power	Torque	Current	RPM	Rolling Distance	Rolling Length	Output Shaft Diameter	Rolling Pipe-OD	Weight	Guarantee
110416000010	GMA60-S	AC220V	60W	60N·m	≤0.46A	2.8r/min	4m	≤85m	Φ20	Φ27.5orΦ33.5	3.5kg	3 years

Dimensional Drawing of KINGZO® Electric Film Reeler GMA60-S

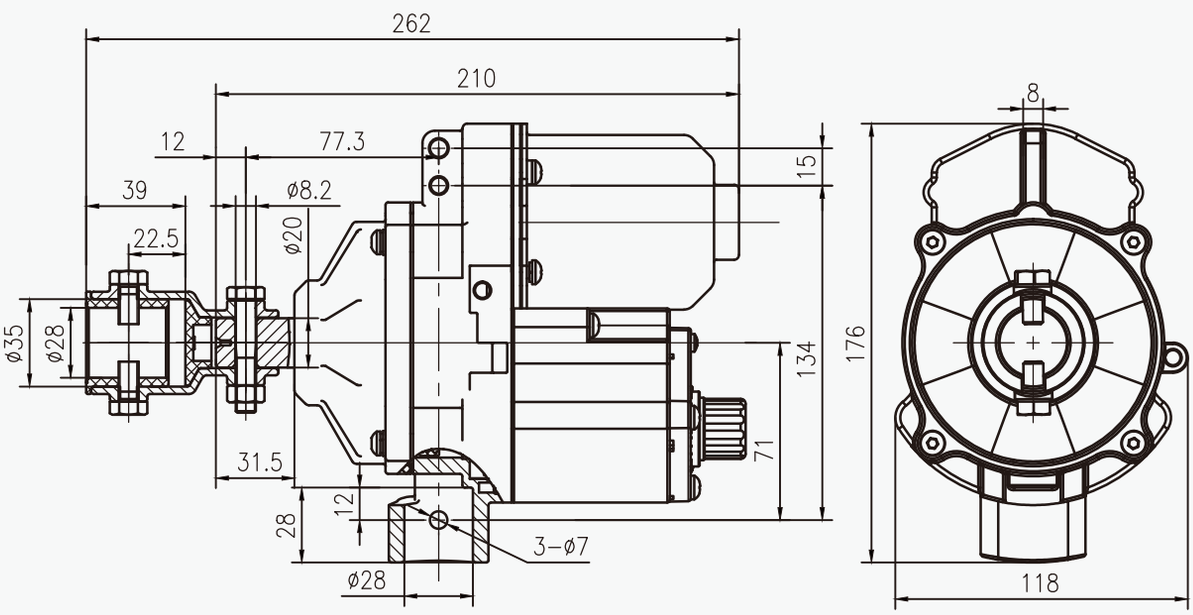

3/KINGZO® Electric Film Reeler GMA100-S

Product Description

- Prevent damage if the wire is accidentally connected in wrong way, prevent accidental overload;
- Reinforced output shaft;
- Low noise, big torque;
- Accurate limit switch and reliable self-locking property;
- Powered by AC220V/AC110V, no need transformer, more convenient to install, lower cost;
- Three water drain holes of anti-condensation added to protect the safety of circuit diagram, Protection Grade: IP55;
- Reinforced output shaft;
- Providing 3 meters long external electric cable for easy connection to the control box;
- 3 years quality guarantee.

Product Code	Model	Voltage	Power	Torque	Current	RPM	Rolling Distance	Rolling Length	Output Shaft Diameter	Rolling Pipe-OD	Weight	Guarantee
110416100010	GMA100-S	AC220V	100W	100N·m	≤0.77A	2.8r/min	4m	≤100m	Φ20	Φ27.5orΦ33.5	3.7kg	3 years

Dimensional Drawing of KINGZO® Electric Film Reeler GMA100-S

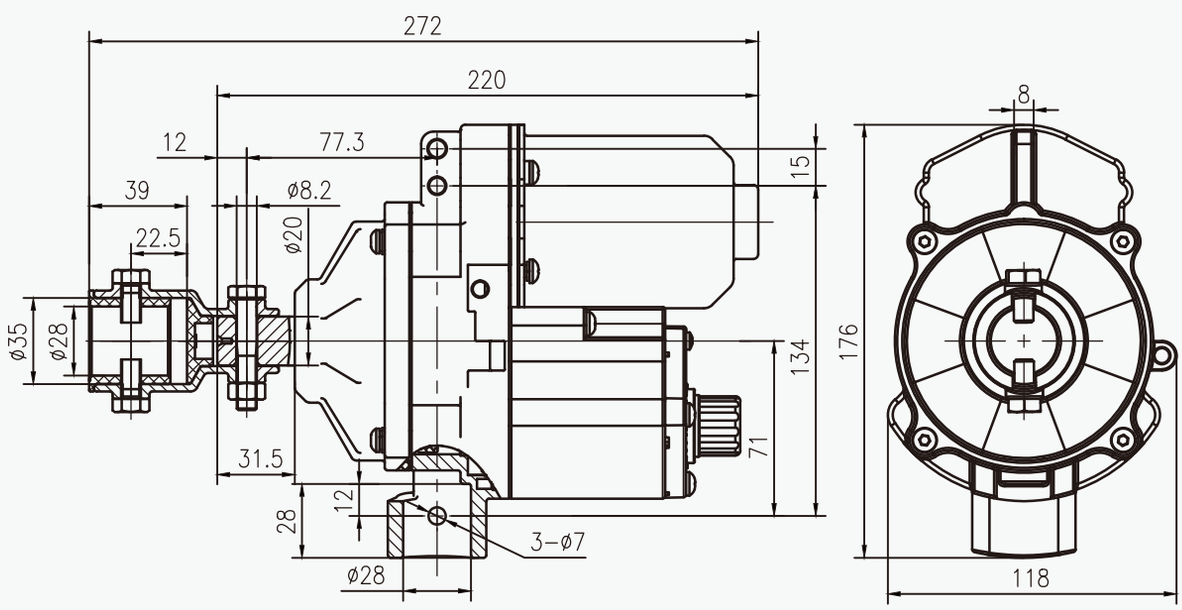

4/KINGZO® Electric Film Reeler GMA100-S-K

Product Description

- Longer rolling height, 8 meters;
- Prevent damage if the wire is accidentally connected in wrong way, prevent accidental overload;
- Reinforced output shaft;
- Accurate limit switch and reliable self-locking property;
- Powered by AC220V/AC110V, no need transformer, more convenient to install, lower cost;
- Three water drain holes of anti-condensation added to protect the safety of circuit diagram, Protection Grade: IP55;
- Reinforced output shaft;
- Providing 3 meters long external electric cable for easy connection to the control box;
- 3 years quality guarantee.

Product Code	Model	Voltage	Power	Torque	Current	RPM	Rolling Distance	Rolling Length	Output Shaft Diameter	Rolling Pipe-OD	Weight	Guarantee
110413000010	GMA100-S-K	AC220V	100W	100N·m	≤0.77A	2.8r/min	8m	≤100m	Φ20	Φ27.5orΦ33.5	3.7kg	3 years

Dimensional Drawing of KINGZO® Electric Film Reeler GMA100-S-K

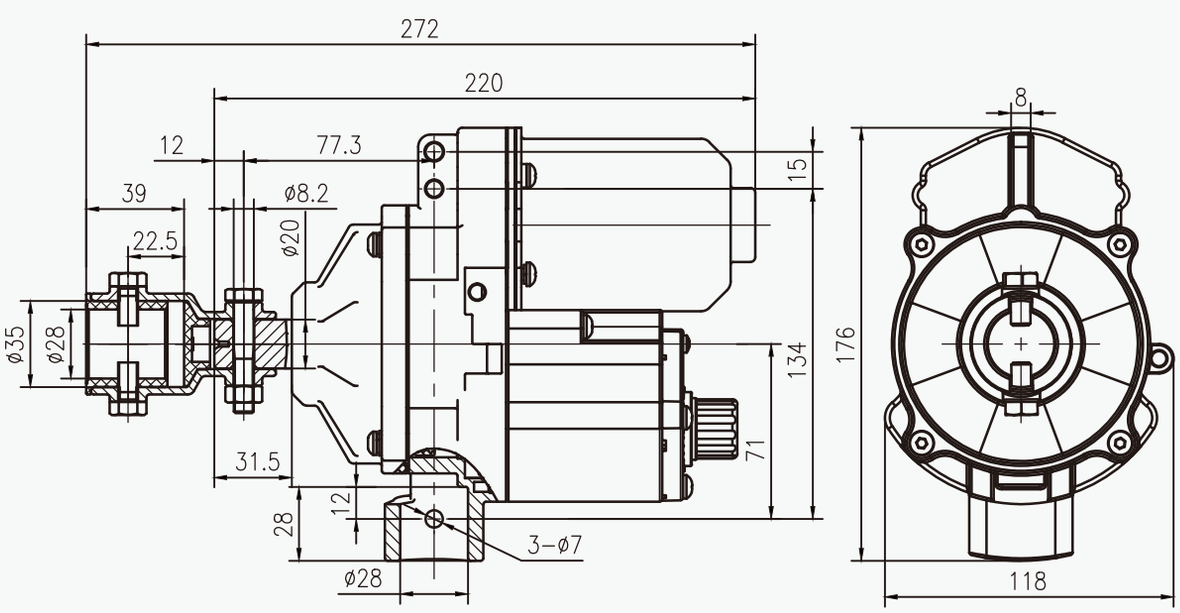

5/KINGZO® Electric Film Reeler GMA120-S-A1

Product Description:

- Manual releasing function, working during power failure;
- Prevent damage if the wire is accidentally connected in wrong way, prevent accidental overload;
- Reinforced output shaft;
- Accurate limit switch and reliable self-locking property;
- Powered by AC220V/AC110V, no need transformer, more convenient to install, lower cost;
- Three water drain holes of anti-condensation added to protect the safety of circuit diagram, Protection Grade: IP55;
- Reinforced output shaft;
- Providing 3 meters long external electric cable for easy connection to the control box;
- 3 years quality guarantee.

Product Code	Model	Voltage	Power	Torque	Current	RPM	Rolling Distance	Rolling Length	Output Shaft Diameter	Rolling Pipe-OD	Weight	Guarantee
110419100010	GMA120-S-A1	AC220V	120W	120N·m	≤0.90A	2.5r/min	4m	≤100m	Φ20	Φ27.5orΦ33.5	4.4kg	3 years

Dimensional Drawing of KINGZO® Electric Film Reeler GMA120-S-A1

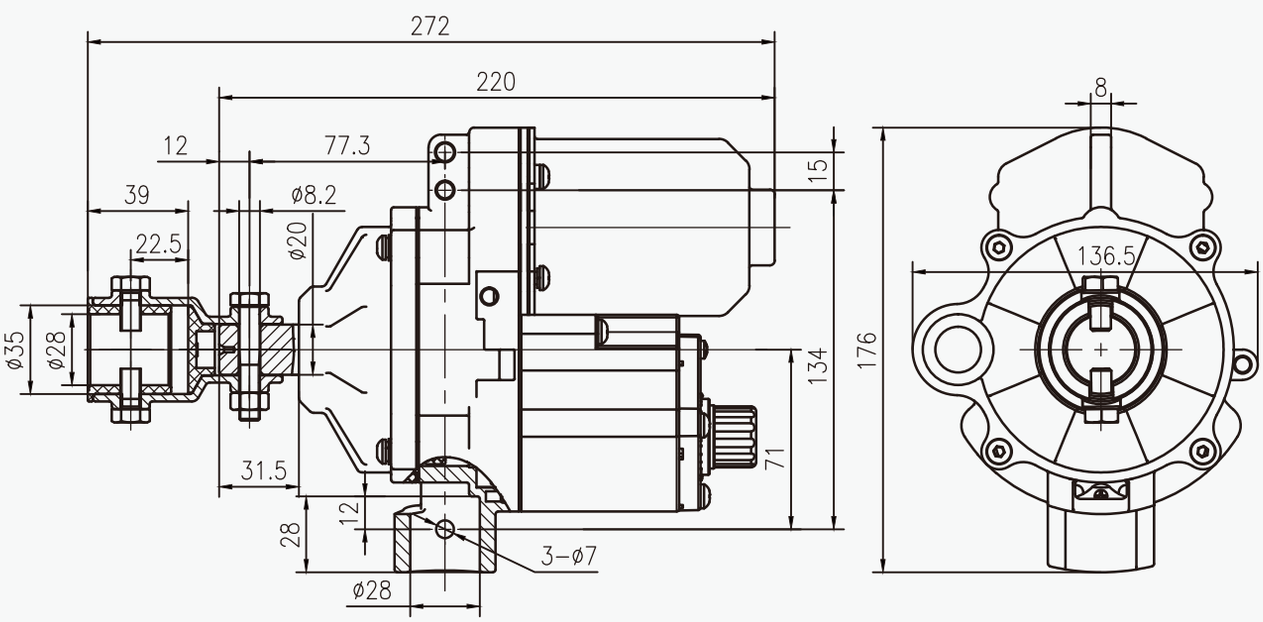

6/KINGZO® Electric Film Reeler GMA120-D

Product Description:

- Dual output shafts;
- Prevent leaning due to the long rolling tube;
- Big torque, rolling more film, lower cost;
- Powered by AC220V/AC110V, no need transformer, more convenient to install, lower cost;
- Three water drain holes of anti-condensation added to protect the safety of circuit diagram, Protection Grade: IP55;
- Reinforced output shaft;
- Providing 3 meters long external electric cable for easy connection to the control box;
- 3 years quality guarantee.

Product Code	Model	Voltage	Power	Torque	Current	RPM	Rolling Distance	Rolling Length	Output Shaft Diameter	Rolling Pipe-OD	Weight	Guarantee
110411100010	GMA120-D	AC220V	120W	140N·m	≤0.88A	2.7r/min	4m	≤120m	Φ20	Φ27.5orΦ33.5	5.4kg	3 years

Dimensional Drawing of KINGZO® Electric Film Reeler GMA120-D

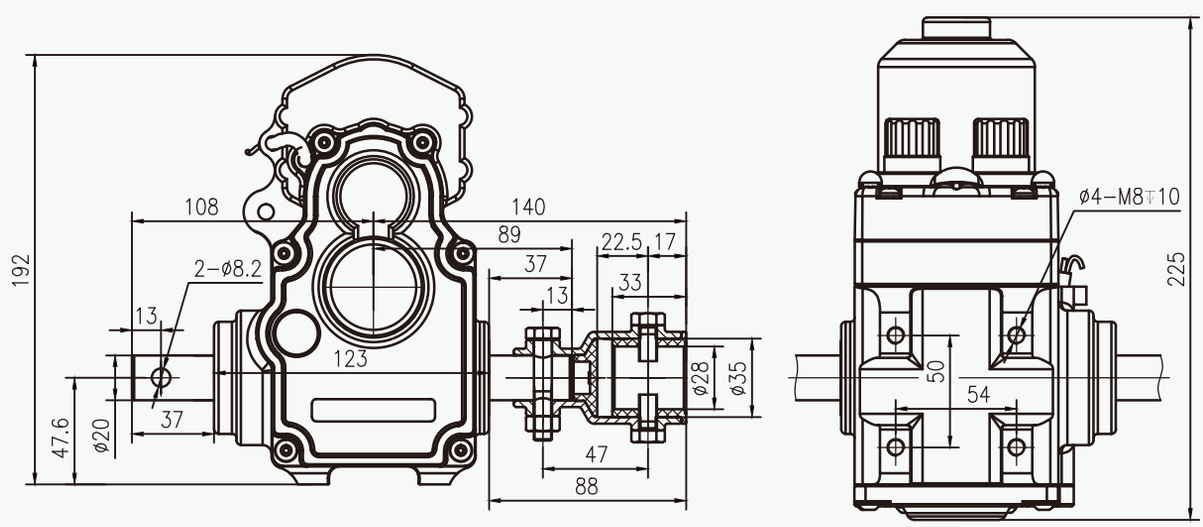

7/KINGZO® Electric Film Reeler GMA120-D-12

Product Description:

- Specially designed for small area windows ventilation to replace big power gear motor;
- High control accuracy and high repeat accuracy;
- Braking distance less than 10mm;
- The simple limit control device;
- Connected to AC220V power directly and save cost;
- With drainage holes, Protection Grade: IP55;
- 3 years quality guarantee.

Product code	Model	Voltage	Power	Max Rotations	Brake Distance	Output Torque	RPM	Weight	Guarantee
110421200010	GMA120-D-12	AC220V	120W	12r	≤10mm	140N·m	2.7r/m	5.4kg	3 years

Windows Ventilation Area (for reference only)

Glass windows (Alum frame and glass thickness 4mm)				**Film windows** (Including double layers/100mm pc board/ alum frame)			
Width B/m	length L/m	rack length Ls/m	pinion diameter /mm	Width B/m	length L/m	rack length Ls/m	pinion diameter /mm
1.2	22	1.2 (Curved)	44	1.2	35	1.2 (Curved)	44
1.4	18	1.4 (Curved)	44	1.4	30	1.4 (Curved)	44
1.6	15	1.6 (Curved)	44	1.6	25	1.6 (Curved)	44

Dimensional Drawing of KINGZO® Electric Film Reeler GMA120-D-12

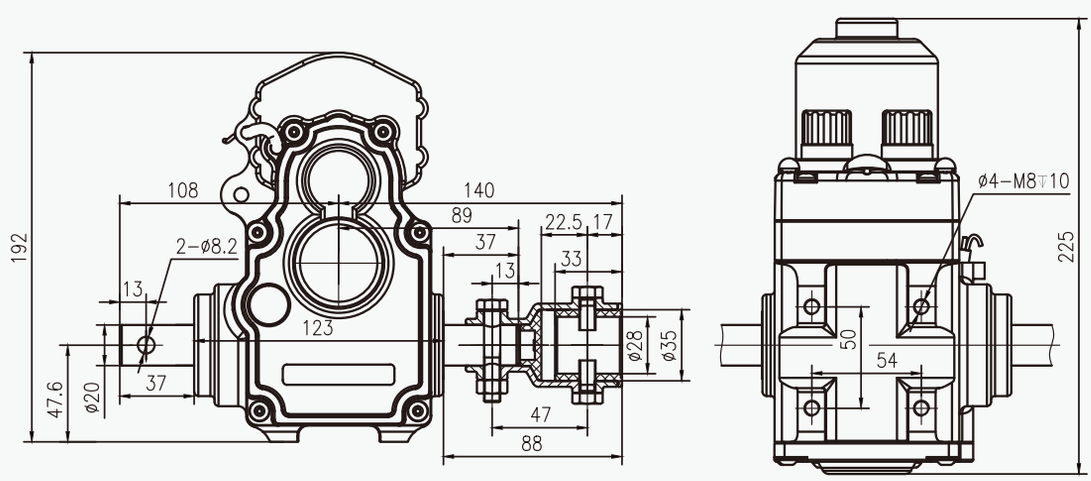

Application & Instruction of
KINGZO® Electric Film Reeler

1/Greenhouse Sidewall& Roof Opening System

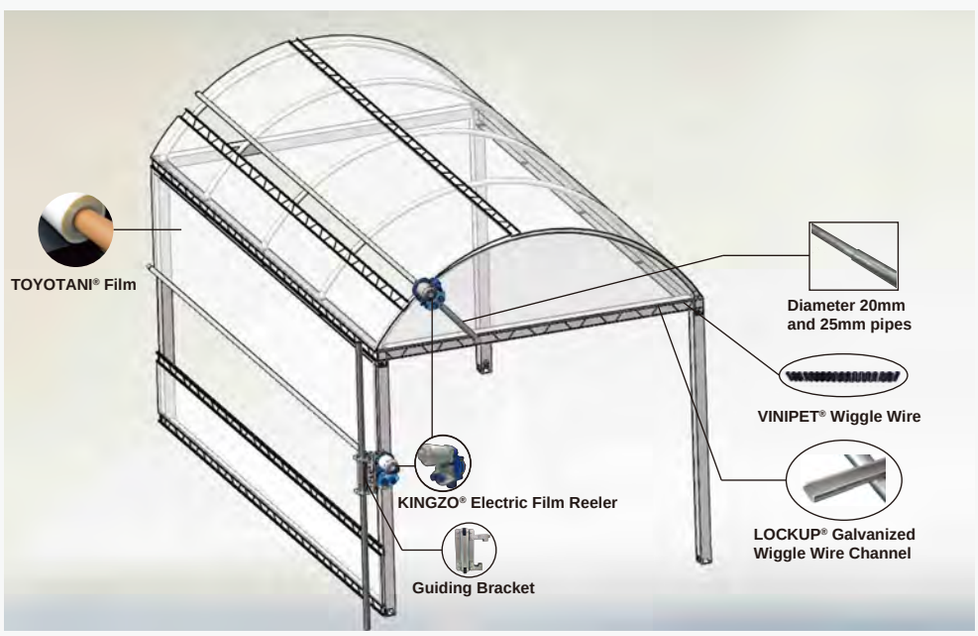

2/Rack & Pinion Venting System Driven by Electric Film Reeler

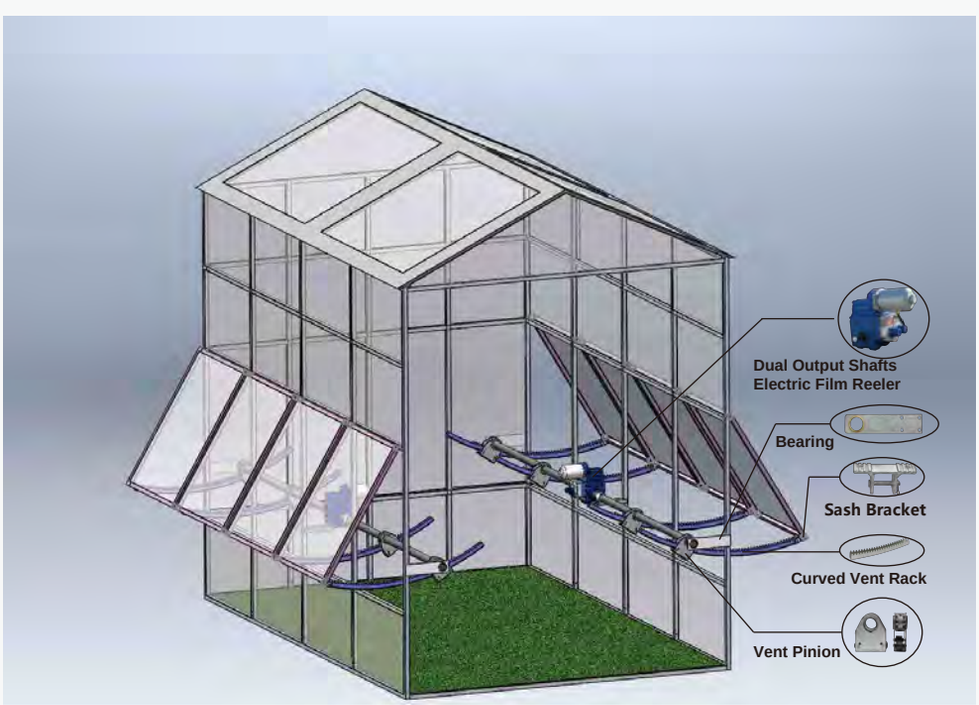

3/Rack& Pinion Curtain System Driven by Electric Film Reeler

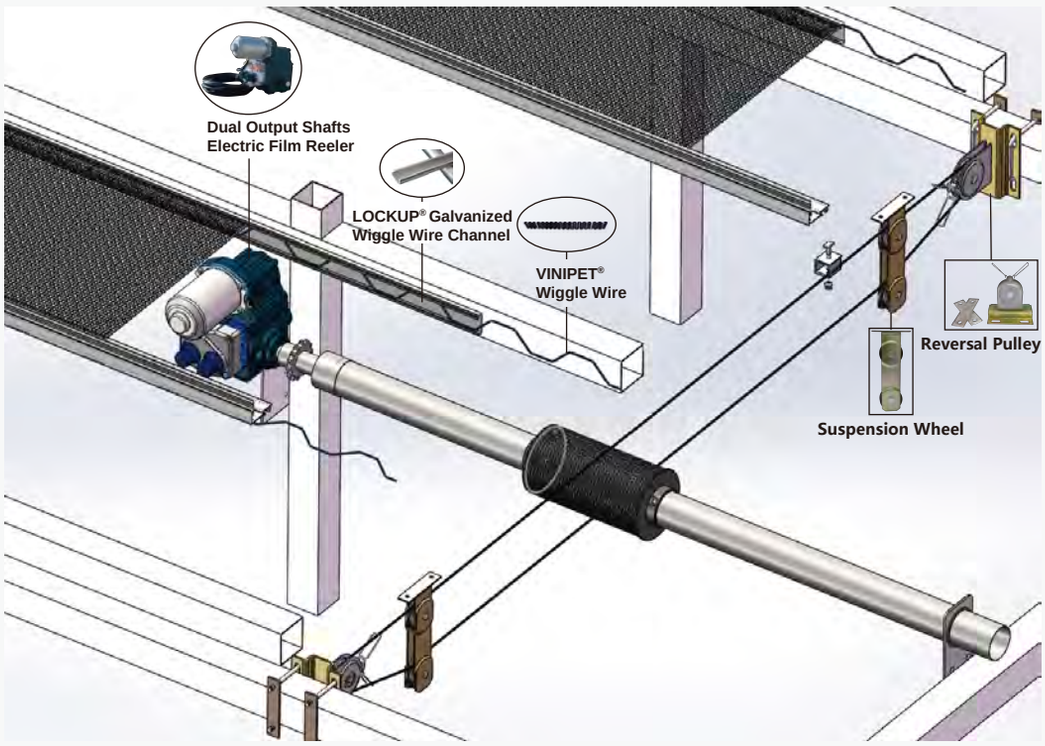

4/Curtain System in Livestock

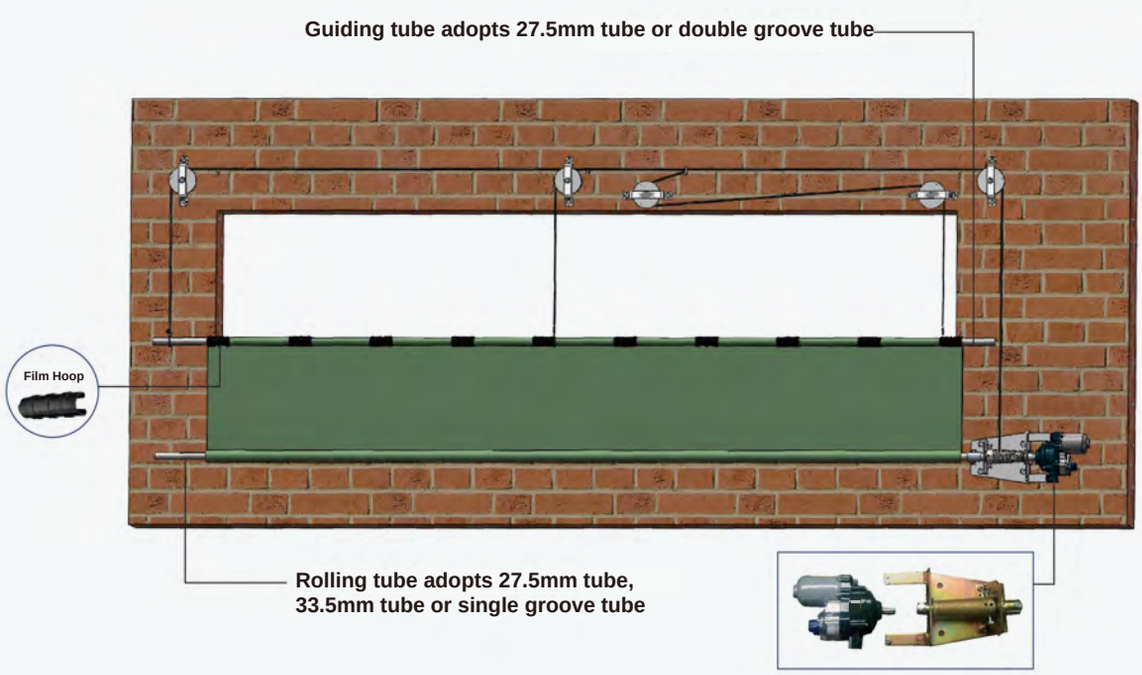

5/Applications of KINGZO® Electric Film Reeler

a. Application on Shading System

b. Application on Curtain System in Livestock

c. Application on Stationary Usage in Greenhouse

6/Schematic Diagram of KINGZO® Electric Film Reeler

Schematic Diagram 24V

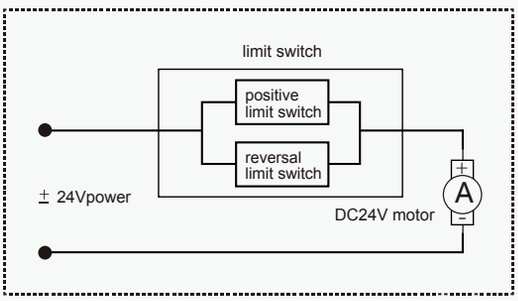

Wiring Diagram 24V Reeler

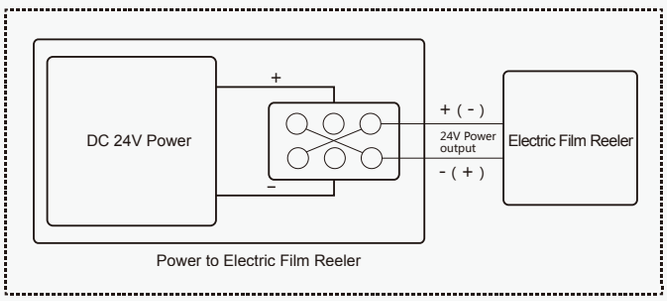

Schematic Diagram 220V

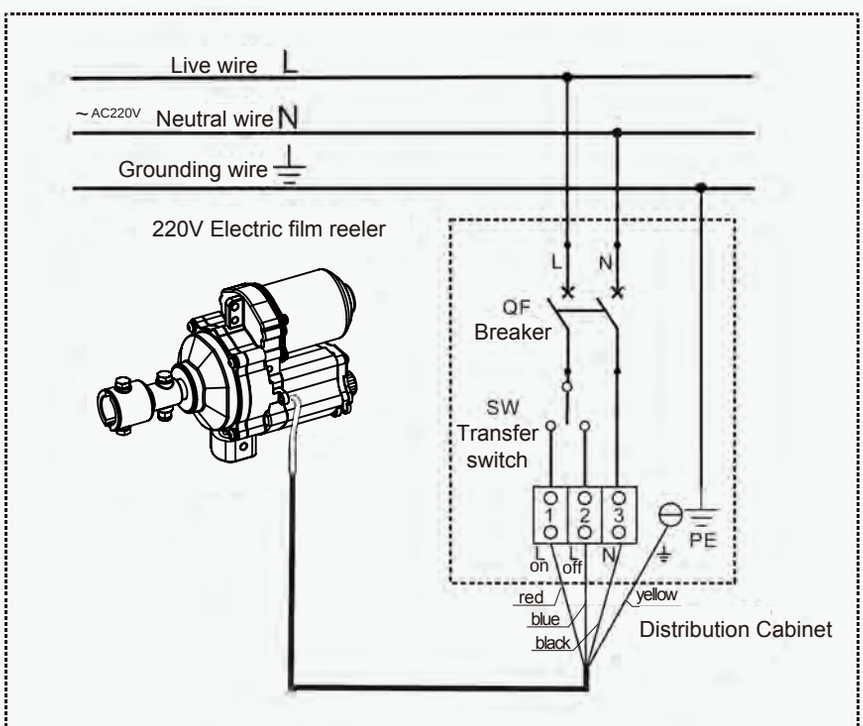

Notice:

1. All power distribution devices MUST be selected and installed by professionals.
2. In order to use the electricity safely, the terminal box of the reeler should be connected with the grounding cable reliably.
3. After the cables are connected, the water clog in the terminal box and the lid of the waterproof box should be sealed tightly to prevent rain from entering.
4. 5 units or less can be used in parallel, if there are more than 5 units in parallel, electrical control devices should be added, and each electrical control device should not have more than 5 units in parallel.

8/KINGZO® Electric Film Reeler Limit Switch Illustration

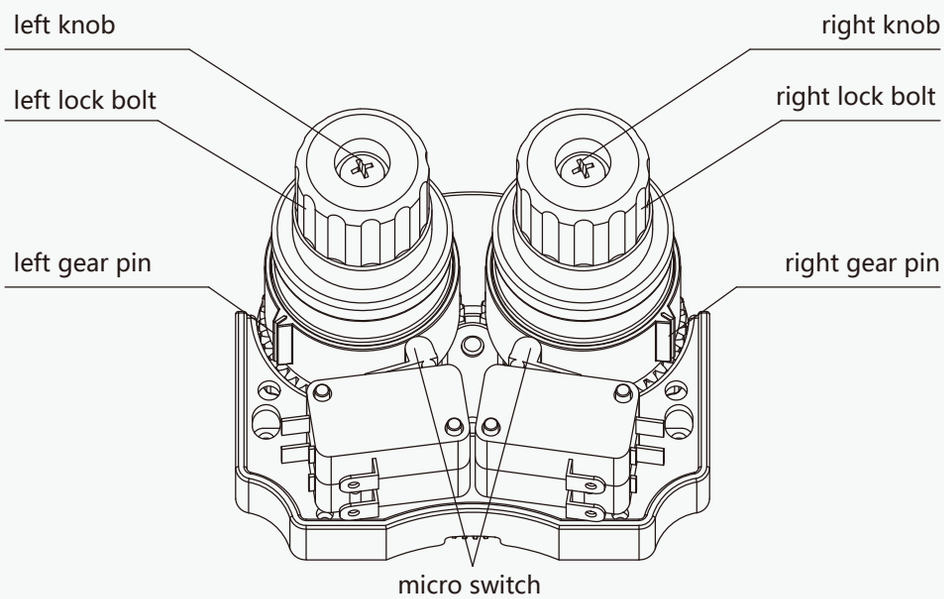

Limit switch adjusting

1. Loosen the left and right lock bolts by a crosshead screwdriver, at the same time make sure the gear pin doesn't touch the microswitch.
2. Turn on the power, and make the motor run, confirm the status of the rolling pipe, it is rolling up or rolling down.
3. When the motor is rolling up the plastics, rotate any of the knobs slowly, and make the gear pin touch the microswitch(with click sound). If the motor stops running, it means this adjust pin controls the direction of the rolling. If the motor doesn't stop running, the other adjust pin is used to control the direction of the rolling.
4. When the motor is rolling up the plastics, the pipe arrives at the required position, at this time rotate the knob which controls the tolling status and makes the gear pin touch the microswitch (with click sound), hold on and fasten the lock bolt by a crosshead screwdriver.
5. When the motor is rolling down the plastics, the pipe arrives at the required position, at this time rotate the knob which controls the tolling status and makes the gear pin touch the microswitch (with click sound), hold on and fasten the lock bolt by a cross head screwdriver.
6. The above steps would set up the motor's limit range. Turn on the power and check if the range set up is right. If it is not correct, please review the manual carefully and do the setup again.

Accessory of KINGZO Electric Film Reeler

FLC® Guiding Bracket

1/CRP40-A(Used with 40W Electric Film Reeler)

CRP40-A Guiding Bracket

Assembly Diagram of Guiding Bracket and Electric Film Reeler

Installation diagram on left side of motor

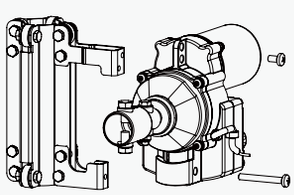

Installation diagram on right side of motor

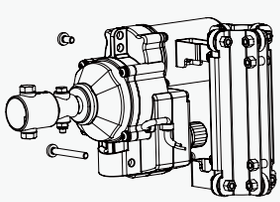

Design sketch after mounting

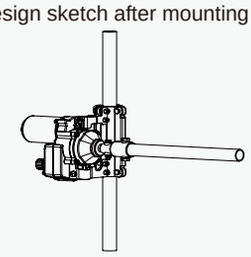

2/CRP100-F(Used with 60W / 100W Electric Film Reeler)

CRP1000-F Guiding Bracket

Assembly Diagram of Bracket and Electric Film Reeler

Installation diagram on left side

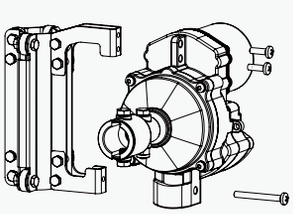

Installation diagram on right side

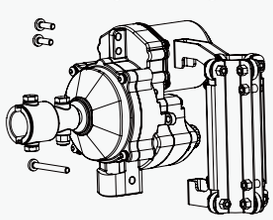

Design sketch after mounted

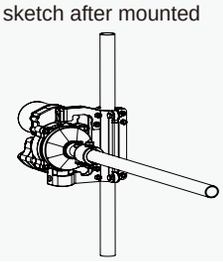

3/CRP100-A-DN20/DN25(Used with 100W Electric Film Reeler)

CRP100-A-DN20 Guiding Bracket

Assembly Diagram of Guiding Bracket and Electric Film Reeler

Installation diagram

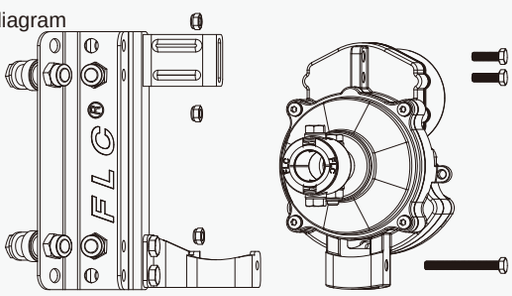

Design sketch after mounting

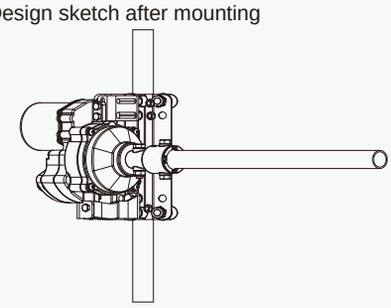

4/CRP120-A-DN20/DN25(Used with 120W Electric Film Reeler)

CRP120-A Guiding Bracket

Assembly Diagram of Bracket and Electric Film Reeler

Installation diagram

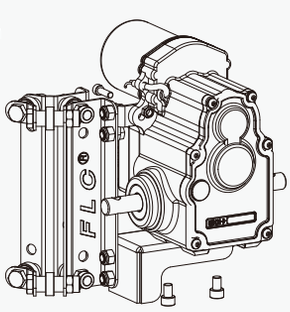

Design sketch after mounting

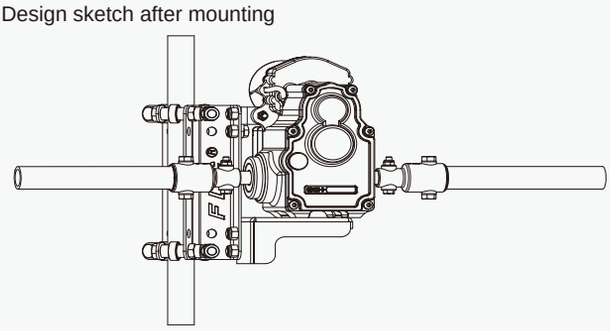

5/CRP180-A-DN20/DN25(Used with 180W Electric Film Reeler)

CRP180-A Guiding Bracket

Assembly Diagram of Bracket and Electric Film Reeler

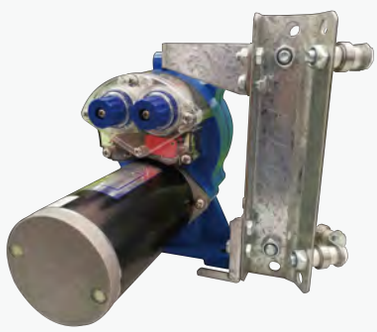

Installation diagram

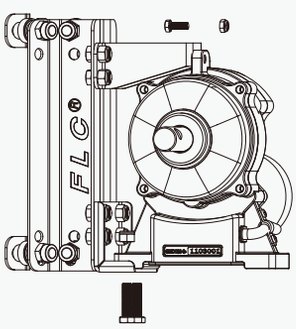

Design sketch after mounting

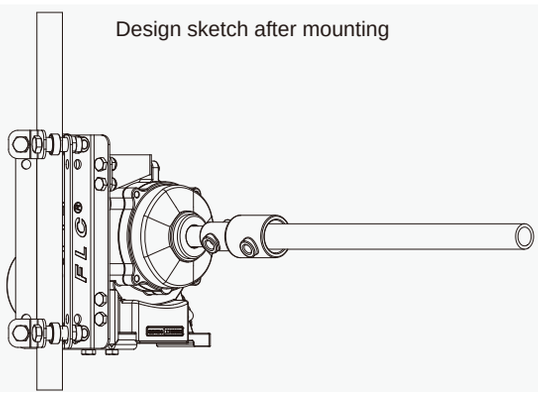

6/Guiding Bracket Parameter

Product Code	Model	Suitable Reeler Model	Suitable Pipe Model	Unit
110503800010	CRP40-A	40W	Φ27.5	piece
110503900010	CRP100-F	60W、100W	Φ27.5	piece
110503100010	CRP100-A-DN20	60W、100W	Φ27.5	piece
110503200010	CRP100-A-DN25	60W、100W	Φ33.5	piece
110502900010	CRP120-A-DN20	120W	Φ27.5	piece
110503000010	CRP120-A-DN25	120W	Φ33.5	piece
110502700010	CRP180-A-DN20	180W	Φ27.5	piece
110502800010	CRP180-A-DN25	180W	Φ33.5	piece

Accessory Products of KINGZO® Electric Film Reeler

Control Product

1/Special Power for DC 24V Electric Film Reeler

- DC 24V Reeler Power – 100W (manual)

- DC 24V Reeler Power – 200W (remote)

- DC 24V Reeler Power – 200W (manual)

- DC 24V Reeler Power – 300W (manual)

2/Special Power for DC 24V Electric Film Reeler

Product Code	Name	Model	Input voltage (AC)	Output voltage (DC)	Power	Unit
190102700010	100W Power for DC Electric Film Reeler(manual)	FLC E800 24V 100W/M1	AC220V	DC24V	100W	piece
190100700010	200W Power for DC Electric Film Reeler(remote)	FLC E800 24V 200W/R	AC220V	DC24V	200W	piece
190100500010	200W Power for DC Electric Film Reeler(manual)	FLC E800 24V 200W/M1	AC220V	DC24V	200W	piece
190102500010	300W Power for DC Electric Film Reeler(manual)	FLC E800 24V 300W-M2	AC220V	DC24V	300W	piece

3/Switch Box for Electric Film Reeler Switch E300-A220V

Product Description

- Working Voltage: AC 220V;
- Working Current: 2A;
- Overload protection for reeler was built-in and reversing switch was external, to control the reeler forward, reversal and stop;
- Easy to install, the wiring is easy and reliable, no power consume.

Notice

- Please connect the control box to reeler according to the diagram;
- Ensure keeping the water-proof and seal after installation;
- Only adopt to AC 220V reeler and only control 1 piece reeler;
- MUST connect the power with ground protection.

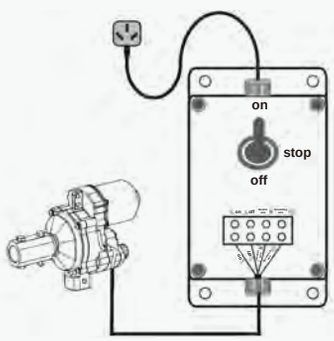

Wiring Diagram

4/Control Box Customized for Reeler 24V

Product Description

- The electric film reeler capacity of each channel is 60W, each channel equips protection fuse;
- Each channel equips one toggle switch to operate the open, close and stop;
- The FLC® control box supplies single phase 220V/50Hz power;
- The earth wire is required, the earth wire must connect safety with the ground point of control box.

Control Box Customized for Reeler 24V (outside)

Notice

- Ensure output terminal function when install the control box wiring, wrong wiring is forbidden;
- Each reeler channel equips overloading and fuse short, please check the fuse if the reeler does not work;
- Each channel equips one piece reeler, please do not connect more reelers;
- The installation and distribution of control box MUST be operated by professional.

Control Box Customized for Reeler 24V (inside)

5/Parameter List of 24V Reeler Control Box

Reeler QTY to control	1 piece Reeler by one Channel	2 pieces Reeler by one Channel	3 pieces Reeler by one Channel	4 pieces Reeler by one Channel
4 **pieces**	DC104	DC204	DC304	DC404
5 **pieces**	DC105	DC205	DC305	DC405
6 **pieces**	DC106	DC206	DC306	DC406
7 **pieces**	DC107	DC207	DC307	DC407
8 **pieces**	DC108	DC208	DC308	DC408
9 **pieces**	DC109	DC209	DC309	DC409
10 **pieces**	DC110	DC210	DC310	DC410
11 **pieces**	DC111	DC211	DC311	DC411
12 **pieces**	DC112	DC212	DC312	DC412
13 **pieces**	DC113	DC213	DC313	DC413
14 **pieces**	DC114	DC214	DC314	DC414
15 **pieces**	DC115	DC215	DC315	DC415
16 **pieces**	DC116	DC216	DC316	DC416
17 **pieces**	DC117	DC217	DC317	DC417
18 **pieces**	DC118	DC218	DC318	DC418
19 **pieces**	DC119	DC219	DC319	DC419
20 **pieces**	DC120	DC220	DC320	DC420

Remarks: 1. Models Selection: Supposing the reeler quantity is 17 pieces and one channel controls 3 pieces reeler, the right control box is horizontal 3 and vertical 17, the model No. is DC317.

2. The sheet data is created according to 100W reeler. Considering the power limit, so one control box equips 20 pieces reelers max.

6/Control Box Customized for Reeler 220V

Product Description

- The electric film reeler capacity of each channel is 400W, each channel equips protection fuse;
- Each channel equips one toggle switch to operate the open、close and stop;
- The FLC® control box supplies single phase 220V / 50Hz power;
- The earth wire is required, the earth wire must connect safety with the ground point of control box.

Control Box Customized for Reeler 220V (outside)

Control Box Customized for Reeler 220V (inside)

- Ensure output terminal function when install the control box wiring, wrong wiring is forbidden;
- Each reeler channel equips overloading and fuse short, please check the fuse if the reeler does not work;
- Each channel equips two piece reelers, please do not connect more reelers;
- The installation and distribution of control box MUST be operated by professionals.

7/Parameter List of Customized 220V Reeler Control Box

Reeler QTY to control	1 piece Reeler by one Channel	2 pieces Reeler by one Channel	3 pieces Reeler by one Channel	4 pieces Reeler by one Channel	5 pieces Reeler by one Channel	6 pieces Reeler by one Channel
1 piece	AC101					
2 pieces	AC102	AC202				
3 pieces	AC103	AC203	AC303			
4 pieces	AC104	AC204	AC304	AC404		
5 pieces	AC105	AC205	AC305	AC405	AC505	
6 pieces	AC106	AC206	AC306	AC406	AC506	AC606
7 pieces	AC107	AC207	AC307	AC407	AC507	AC607
8 pieces	AC108	AC208	AC308	AC408	AC508	AC608
9 pieces	AC109	AC209	AC309	AC409	AC509	AC609
10 pieces	AC110	AC210	AC310	AC410	AC510	AC610
11 pieces	AC112	AC211	AC311	AC411	AC511	AC611
12 pieces	AC113	AC212	AC312	AC412	AC512	AC612
13 pieces	AC114	AC213	AC313	AC413	AC513	AC613
14 pieces	AC115	AC214	AC314	AC414	AC514	AC614
15 pieces	AC116	AC215	AC315	AC415	AC515	AC615
16 pieces	AC117	AC216	AC316	AC416	AC516	AC616
17 pieces	AC118	AC217	AC317	AC417	AC517	AC617
18 pieces	AC119	AC218	AC318	AC418	AC518	AC618
19 pieces	AC120	AC219	AC319	AC419	AC519	AC619
20 pieces		AC220	AC320	AC420	AC520	AC620
21 pieces		AC221	AC321	AC421	AC521	AC621
22 pieces		AC222	AC322	AC422	AC522	AC622
23 pieces		AC223	AC323	AC423	AC523	AC623
24 pieces		AC224	AC324	AC424	AC524	AC624
25 pieces		AC225	AC325	AC425	AC525	AC625
26 pieces		AC226	AC326	AC426	AC526	AC626
27 pieces		AC227	AC327	AC427	AC527	AC627
28 pieces		AC228	AC328	AC428	AC528	AC628
29 pieces		AC229	AC329	AC429	AC529	AC229
30 pieces		AC230	AC330	AC430	AC530	AC630
31 pieces		AC231	AC331	AC431	AC531	AC631
32 pieces		AC232	AC332	AC432	AC532	AC632
33 pieces		AC233	AC333	AC433	AC533	AC633
34 pieces		AC234	AC334	AC434	AC534	AC634
35 pieces		AC235	AC335	AC435	AC535	AC635
36 pieces		AC236	AC336	AC436	AC536	AC636
37 pieces		AC237	AC337	AC437	AC537	AC637
38 pieces		AC238	AC338	AC438	AC538	AC638
39 pieces		AC239	AC339	AC439	AC539	AC639
40 pieces		AC240	AC340	AC440	AC540	AC640

Remarks: 1. Models Selection: Supposing the reeler quantity is 17 pieces and one channel controls 3 pieces reeler, the right control box is horizontal 3 and vertical 17, the model No. is AC317.

2. One AC 220V control box may control 6 pieces reelers per channel max.

TANIKANKIT®/
FLC® Manual Film Reeler

1/Appearance of Manual Film Reeler

● BS104

● NA104

● NS105

● NSA105

● NA105

● BS107

● BSA107

● BA107

2/Parameter Sheet for FLC®/ TANIKANKIT® Manual Film Reeler

Product Code	Model No.	Torque	Speed Ratio	Rolling Length	Application	Size of Rolling Tube	Size of Guiding Tube	Guarantee
110202100010	BS104	30N·m	4:1	≤90m	Sidewall	Φ25x2orΦ27.5	Φ27.5	3 years
110101100010	NA104	30N·m	4:1	≤100m	Sidewall and Roof	Φ19orΦ22orΦ27.5	Crank rodΦ22 or Φ27.5	3 years
110200400010	NS105	50N·m	5:1	≤100m	Sidewall	Φ22orΦ27.5	Φ27.5	3 years
110200600010	NSA105	40N·m	5:1	≤90m	High Sidewall	Φ22orΦ27.5	Φ27.5	3 years
110200200010	NA105	50N·m	5:1	≤100m	Roof	Φ22orΦ27.5	upper pipe for slip pipeΦ22orΦ27.5 lower pipe for slip pipeΦ27.5orΦ33.5	3 years
110205200010	BS107	60N·m	7:1	≤130m	Sidewall	Φ22orΦ27.5	Φ27.5	3 years
110205100010	BSA107	50N·m	7:1	≤90m	High Sidewall	Φ22orΦ27.5	Φ27.5	3 years
110205300010	BA107	60N·m	7:1	≤130m	Roof	Φ22orΦ27.5	upper pipe for slip pipeΦ22orΦ27.5 lower pipe for slip pipeΦ27.5orΦ33.5	3 years

3/Model Naming Decomposition

S stands for Sidewall, A stands for high position, SA stands for Sidewall at high position

B/N - SA - 105

BN is first Capital, stands for series model

105 stands for speed ratio of 5:1
107 stands for speed ratio of 7:1

FLC® /TANIKANKIT®
Manual Film Reeler Introduction

1/ FLC® BS104 Manual Film Reeler

02

Product Description

- Easy to install and operate;
- Big output torque and light weight;
- Side ventilation for greenhouse;
- Accurate limit range and reliable performance of self-locking;
- Wide application for greenhouse, livestock, etc.;
- Suitable for Φ22 or Φ27.5 rolling tube;
- Stainless steel handles, full plastic resin casing, long anticorrosion time;
- 3 years quality guarantee.

Product Code	Model No.	Torque	Speed Ratio	Rolling Length	Application	Size of Rolling Tube	Size of Guiding Tube	Guarantee
110202100010	BS104	30N·m	4:1	≤90m	Sidewall	Φ22 or Φ27.5	Φ27.5	3 years

FLC® BS104 Manual Film Reeler Application Picture

2/ TANIKANKIT® NA104 Manual Film Reeler

Product Description

- Easy to install and operate;
- Big output torque and light weight;
- Side & roof ventilation for greenhouse;
- Reliable performance of self-locking;
- Wide application for greenhouse, livestock, etc.;
- Suitable for Φ22 or Φ27.5 rolling tube;
- Stainless steel handles, full aluminum shell, long anticorrosion time;
- 3 years quality guarantee.

Product Code	Model No.	Torque	Speed Ratio	Rolling Length	Application	Size of Rolling Tube	Size of Guiding Tube	Guarantee
110101100010	NA104	30N·m	4:1	≤100m	Sidewall and Roof	Φ19 or Φ22 or Φ27.5	Crank rod Φ22 or Φ27.5	3 years

TANIKANKIT® NA104 Manual Film Reeler Application Picture

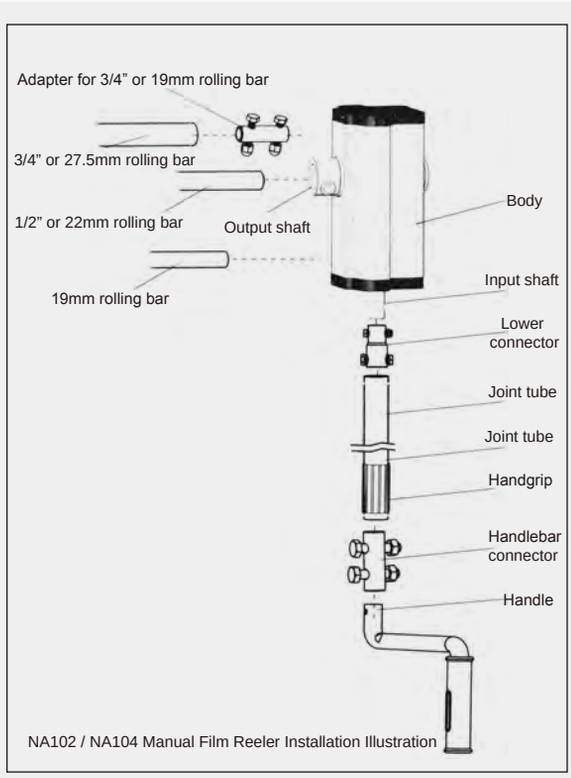

NA102 / NA104 Manual Film Reeler Installation Illustration

3/FLC® NS105 Manual Film Reeler

Product Description

- Easy to install and operate;
- Big output torque and light weight;
- Side ventilation for greenhouse;
- Reliable performance of self-locking;
- Wide application for greenhouse, livestock, etc.;
- Suitable for Φ22 or Φ27.5 rolling tube;
- 3 years quality guarantee.

Product Code	Model No.	Torque	Speed Ratio	Rolling Length	Application	Size of Rolling Tube	Size of Guiding Tube	Guarantee
110200400010	NS105	50N·m	5:1	≤100m	Sidewall	Φ22 or Φ27.5	Φ27.5	3 years

FLC® NS105 Manual Film Reeler Application Picture

4/FLC® NSA105 Manual Film Reeler

Product Description

- Easy to install and operate;
- Add the transition gear in the transmission system with more steady performance;
- Big speed ratio and output torque, light weight;
- Reliable performance of self-locking;
- Side ventilation for high position;
- 3 years quality guarantee.

Product Code	Model No.	Torque	Speed Ratio	Rolling Length	Application	Size of Rolling Tube	Size of Guiding Tube	Guarantee
110200600010	NSA105	40N·m	5:1	≤90m	Sidewall for high position	Φ22 or Φ27.5	Φ27.5	3 years

FLC® NSA105 Manual Film Reeler Application Picture

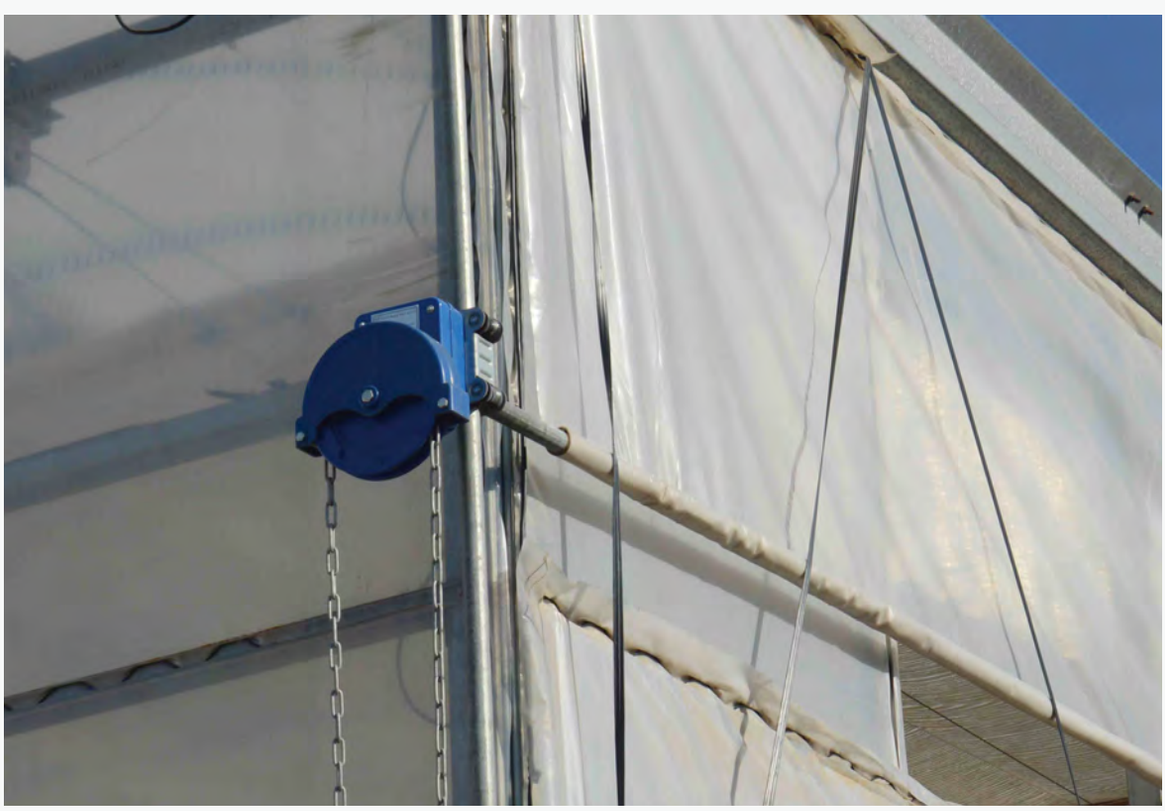

5/FLC® NA105 Manual Film Reeler

Product Description

- Easy to install and operate;
- Add the transition gear in the transmission system; with more steady performance;
- Big speed ratio and output torque, light weight;
- Wide application: besides greenhouse vent, it also can be used for ventilation driven by rack and pinion system by hand in small area;
- Reliable performance of self-locking;
- Suitable for Φ22 or Φ27.5 rolling tube;
- 3 years quality guarantee.

Product Code	Model No.	Torque	Speed Ratio	Rolling Length	Application	Size of Rolling Tube	Size of Guiding Tube	Guarantee
110200200010	NA105	50N·m	5:1	≤100m	Roof	Φ22 or Φ27.5	upper pipe Φ22 or Φ27.5 lower pipe Φ27.5 or Φ33.5	3 years

FLC® NA105 Manual Film Reeler Application Picture

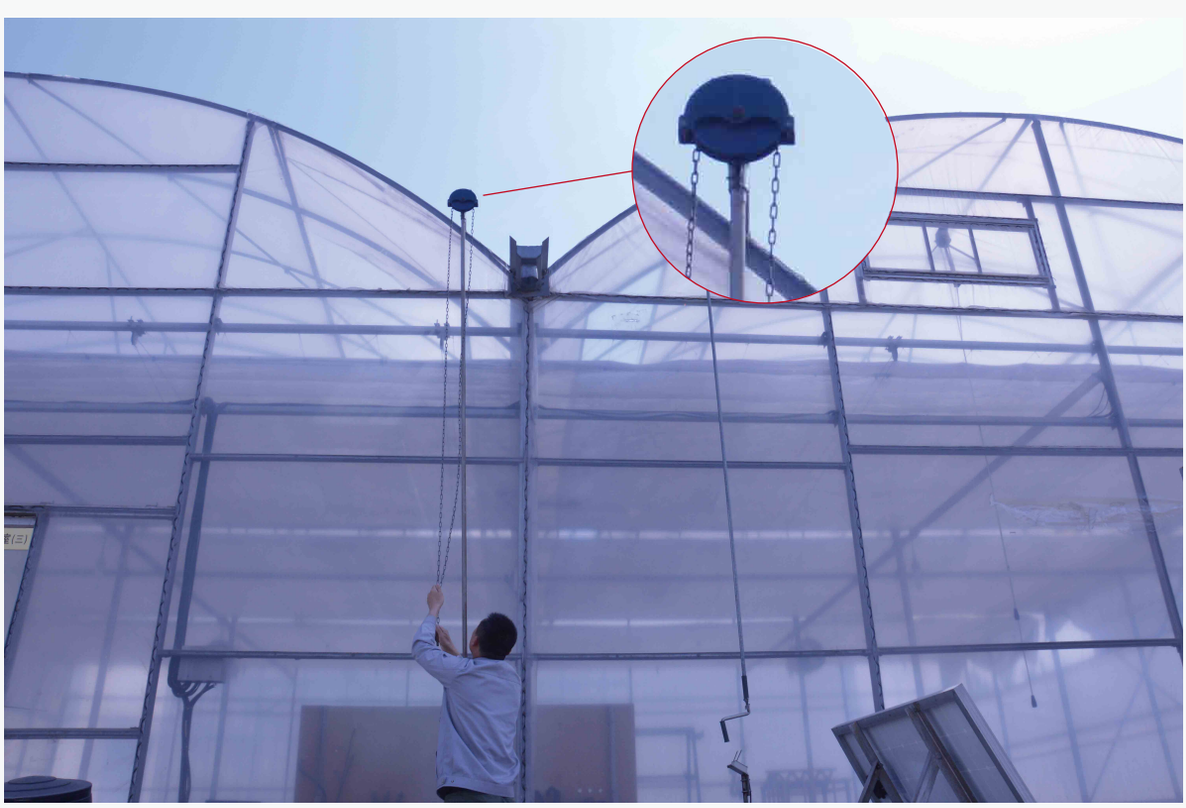

6/FLC®BS107 Manual Film Reeler

Product Description

- Easy to install and operate;
- Add the transition gear in the transmission system with more steady performance;
- Big speed ratio and output torque, light weight;
- Suitable for side curtain vent of livestock especially;
- Reliable performance of self-locking;
- Side ventilation for greenhouse;
- 3 years quality guarantee.

Product Code	Model No.	Torque	Speed Ratio	Rolling Length	Application	Size of Rolling Tube	Size of Guiding Tube	Guarantee
110205200010	BS107	60N·m	7:1	≤130m	Sidewall	Φ22 or Φ27.5	Φ27.5	3 years

FLC® BS107 Manual Film Reeler Application Picture

7/FLC® BSA107 Manual Film Reeler

Product Description

- Easy to install and operate;
- Add the transition gear in the transmission system with more steady performance;
- Big speed ratio and output torque, light weight;
- Suitable for side curtain vent of livestock especially;
- Reliable performance of self-locking;
- Side ventilation for greenhouse;
- 3 years quality guarantee.

Product Code	Model No.	Torque	Speed Ratio	Rolling Length	Application	Size of Rolling Tube	Size of Guiding Tube	Guarantee
110205100010	BSA107	50N·m	7:1	≤90m	Sidewall for high position	Φ22 or Φ27.5	Φ27.5	3 years

FLC®BSA107 Manual Film Reeler Application Picture

8/FLC® BA107 Manual Film Reeler

Product Description

- Big output torque and longer rolling length;
- Easy to install and operate;
- Self locking at two directions, safe and reliable;
- Suitable for various film and curtain vent in livestock especially the roof vent for greenhouse;
- 3 years quality guarantee.

Product Code	Model No.	Torque	Speed Ratio	Rolling Length	Application	Size of Rolling Tube	Size of Guiding Tube	Guarantee
110205300010	BA107	60N·m	7:1	≤130m	Roof	Φ22 or Φ27.5	upper pipe Φ22orΦ27.5 lower pipeΦ27.5orΦ33.5	3 years

FLC® BA107 Manual Film Reeler Application Picture

03

Wiggle Wire/ Wiggle Wire Channel

VINIPET® Wiggle Wire

1. VINIPET® B6-23 Wiggle Wire
2. VINIPET® B5B Wiggle Wire
3. VINIPET® B5-20 Wiggle Wire
4. VINIPET® B5B Wiggle Wire

LOCKUP® Wiggle Wire Channel

1. LOCKUP® Galvanized Wiggle Wire Channel
2. LOCKUP® Swedged Galvanized Wiggle Wire Channel
3. LOCKUP® Aluminum Wiggle Wire Channel

VINIPET® Wiggle Wire

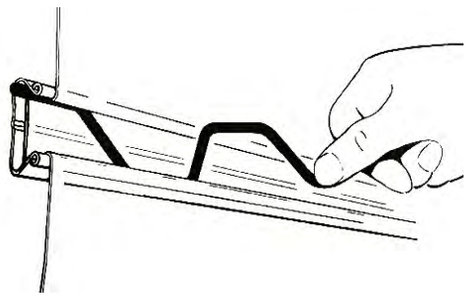

Japanese Standard, Japanese Production Line,
Eight Procedures of Inspection; Anti-fake stripes,
Thicker ends of wire, Economical and Safe.

1/VINIPET® Wiggle Wire Introduction

VINIPET® Wiggle Wire was originally designed and manufactured for exporting to Japan according to Japanese standard. With eight inspection procedures(Figure 1), it is made of specialized spring wire, coated by the anti-aging resin for many years, produced under strict management system, it has been exported to Japan for 16 years.

VINIPET® Wiggle Wire has B5 and B6 two series of products, including VINIPET®B623 (Blue, 6 years warranty), VINIPET®B5B (White, 5 years warranty), VINIPET®B5 (Black, 5 years warranty), thicker and rounded ends PVC coating design, can be repeatedly used for 6 - 8 years.(White, 5 years guarantee).

Figure 1
Eight Inspection Procedures

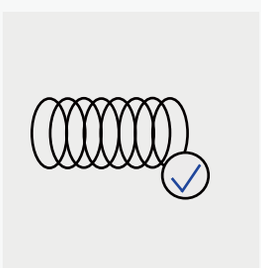

1. Inspection of Steel Wire

Wire Diameter: 2.30mm
Diameter after Coating: 2.85mm
Tensile Strength > 1800N/mm²

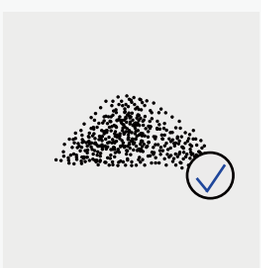

2. Inspection of Plastic Powder

8 terms of technical specification inspection
Inspected by American Q-Lab UV testing machine

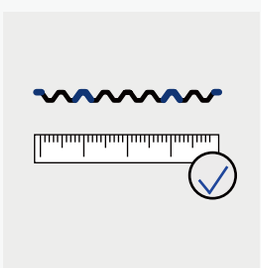

3. Inspection of Shaping product Dimension

Length: 1955mm
Height: 36mm

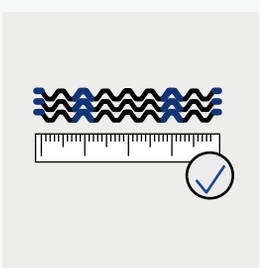

4. Inspection of End product Dimension

Length: 1955mm
Height: 36mm

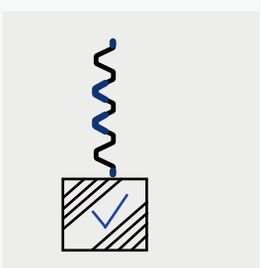

5. Inspection of Elasticity

Taking a sample of 275mm length wiggle wire with a load 20kg weight, the difference is less than 15mm.

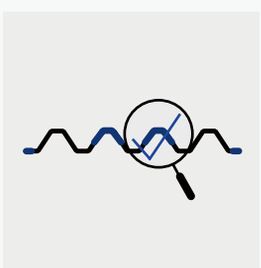

6. Inspection of Appearance

No scratch and no deformation

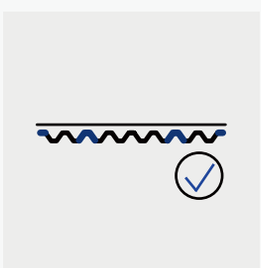

7. Inspection of flatness and distortion

Glancing flatness < 20mm
Torsion resistance < 30mm

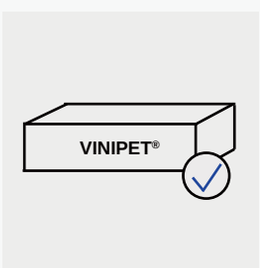

8. Inspection of finished products

Comprehensive evaluation of Length, Height, Weight,Diameter, Appearance and package

2/The Advantage of VINIPET® Wiggle Wire

Economical

a. Due to the aging and cracking of the outer PVC coating resin, the common wiggle wire in the macket will be rusted out in less than two years and cannot be used repeatedly.

b. VINIPET® Wiggle Wire is made of spring steel wire, coated with UV resin, can be used 6-8 years repeatedly. So it is real cost-saving.

Safety

a. The proportion of wiggle wires in the cost of the whole greenhouse is less than 1%. It is this 1% of wiggle wires that guarantees 100 % safety of greenhouse film.

b. In recent years, 2-5 years warranty film is widely used, but the common wiggle wire with it is easy to rust and break down at any time. VINIPET® Wiggle Wire, coated by premium engineering plastic powder with UV stabilization, can withstand 14-grade wind. The film-fixing ability is stronger.

c. Common wiggle wire's ends are too sharp, and it is easy to puncture the film, while VINIPET® Wiggle Wire's ends are thicker and rounded, ensuring easy and faster installation while simultaneously preventing tears.

Quality Guarantee

From purchase date, within the warranty period, FLC would do full compensate or replace them due to quality problems.

Testing of simulated wind pressure

Test Method: The test area is 1 square meter, the two sides of the film are fixed in the wiggle wire channel with VINIPET®6 wiggle wires.

Test Result: The maximum load-bearing capacity is 580kg, and the average load-bearing capacity of each wiggle wire is 290kg. (Considering the safety factor of twice, the load-bearing of 14-grade wind is about 133kg per square meter, the wiggle wire which withstands 14-grade wind should bear more than 260 kg load per square meter)

Comparison of wiggle wire flatness

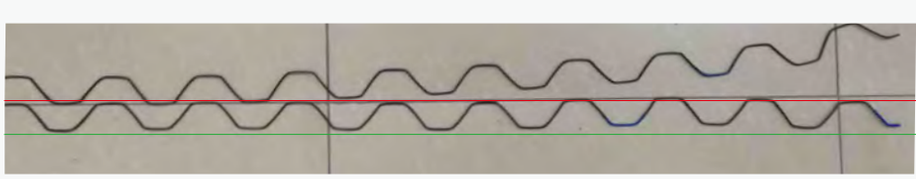

It is proved that VINIPET® B6 wiggle wire distort less than common one when they are taken out of wiggle wire channel.

VINIPET® Wiggle Wire

VINIPET® B6-23 Wiggle Wire

1/VINIPET® B6-23 Wiggle Wire

Production Description

- Four black stripes as anti-fake mark;
- Thicker and rounded ends to protect film and ensure easier and faster installation;
- Made of galvanized steel wire and coated by UV resin, repeated to use 6-8 years;
- 6 years quality guarantee.

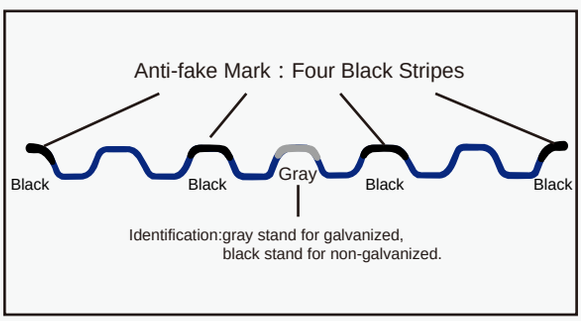

Product Code	Model	Specification	Color	Anti-fake Mark	Treatment	Guarantee
120503700010	B6-23	Φ2.3	blue	four black stripes	full coated	6 years

Appearance Figure

Application Figure

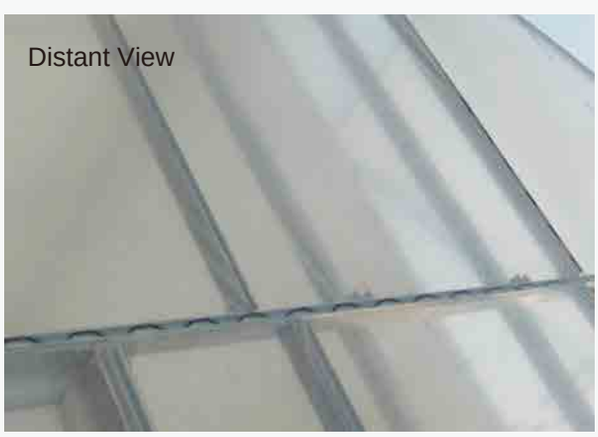

VINIPET® Wiggle Wire

VINIPET® B6B Wiggle Wire

2/VINIPET® B6B Wiggle Wire

Production Description

- White color generally absorbs very little heat, to extent the lifetime of film;
- Thicker and rounded ends to protect film and ensure easier and faster installation;
- Made of galvanized steel wire and coated by UV resin, repeated to use 6-8 years;
- 6 years quality guarantee.

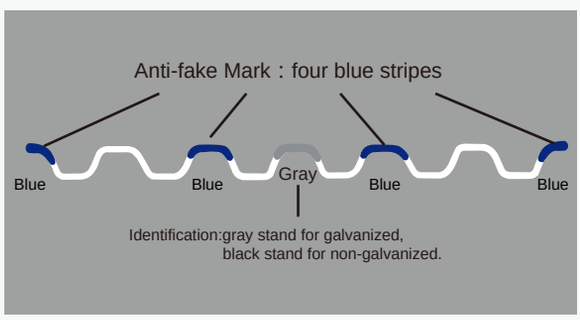

Product Code	Model	Specification	Color	Anti-fake Mark	Treatment	Guarantee
120504400010	B6B-20	Φ2.0	white	four blue stripes	full coated	6 years
120504600010	B6B-23	Φ2.3	white	four green stripes	full coated	6 years

VINIPET® B6B-20 Wiggle Wire Appearance Figure

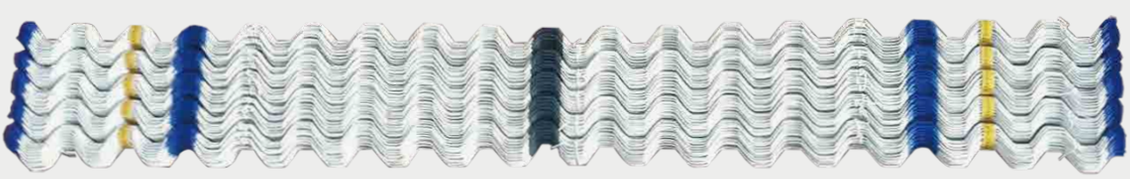

Close View

VINIPET® B6B-23 Wiggle Wire Appearance Figure

VINIPET® Wiggle Wire

VINIPET® B5-20 Wiggle Wire

3/VINIPET® B5-20 Wiggle Wire

Product Description

- Anti-fake mark: Four Blue Stripes;
- Thicker and rounded ends to protect film and ensure easier and faster installation;
- 5 years quality guarantee.

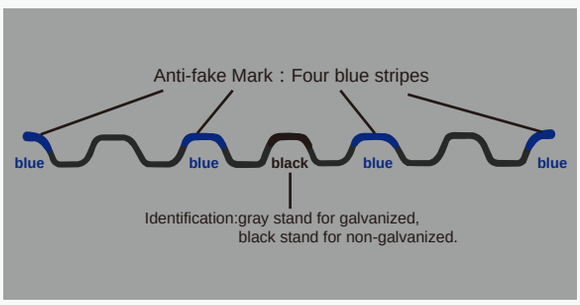

Product Code	Model	Specification	Color	Anti-fake Mark	Treatment	Guarantee
120503900010	B5-20	Φ2.0	black	four blue stripes	full coated	5 years

Appearance Figure

Application Figure

VINIPET® Wiggle Wire

VINIPET® B5B Wiggle Wire

4/VINIPET® B5B Wiggle Wire

Product Description

- Thicker and rounded ends to protect film and ensure easier and faster installation;
- White color generally absorbs very little heat, to lengthen the lifetime of film;
- 5 years quality guarantee.

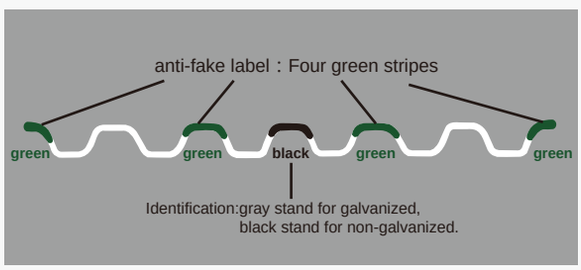

Note:B5B White wiggle wire uses white plastic powder made of special formula, the Elongation At Break has been increased by 30%-50% than the black plastic powder, therefore, the white wiggle wire has longer life than black wiggle wire.

Product Code	Model	Specification	Color	Anti-fake Mark	Treatment	Guarantee
120504200010	B5B-20	Φ2.0	white	four blue stripes	full coated	5 years
120504500010	B5B-23	Φ2.3	white	four green stripes	full coated	5 years

VINIPET® B5B-23 Wiggle Wire Appearance Figure

Application Figure

5/VINIPET® Wiggle Wire Application Picture

LOCKUP®

Wiggle Wire Channel

1/LOCKUP® Galvanized Wiggle Wire Channel

Product Description

- Made of steel sheet from “Shougang Group”;
- Thick Zinc Coating, Long time of anti corrosion;
- Scientific design of inside angle.

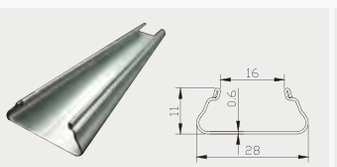

LOCKUP® KF-2A Galvanized wiggle wire channel

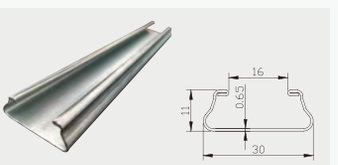

LOCKUP® KF-3A Galvanized wiggle wire channel

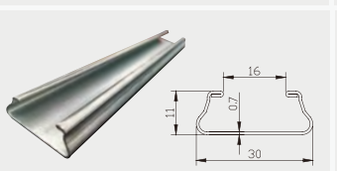

LOCKUP® KF-3B Galvanized wiggle wire channel

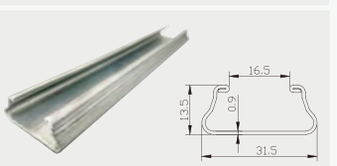

LOCKUP® KF-4 Galvanized wiggle wire channel

Principle of Wind-resist

When the wind acts on film, the force is transferred to the wiggle wire, according to the force theory, if α<β, the channel will lock the wiggle wire and the wiggle wire will move downwards; if α>β, the wiggle wire will move upwards.

When the wind-resist LOCKUP® wiggle wire channel is used with wiggle wire, as α<β, the more wind loading, the more force to go downwards. It is hard to collapse. On the contrary, for the common and U shape wiggle wire channel, α>β, so the more wind loading, the more force to go upwards. It is hard to collapse.

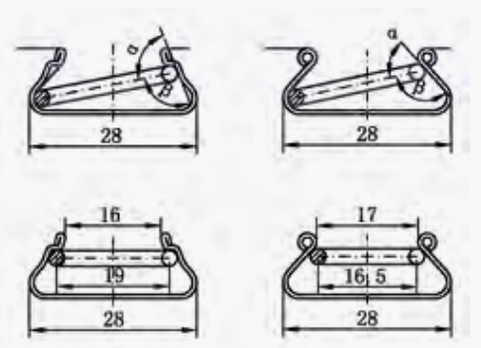

diagram of wind-resist principle

Model	Specification	Width(mm)	Height(mm)	Thickness(mm)	Zinc Coating	Length(m/pc)
KF-2A (120)	Common	28	10	0.60	≥120g/m^2	4m/6m
KF-3B (120)	Common	30	11	0.70	≥120g/m^2	4m/6m
KF-3B (275)	Common	30	11	0.70	≥275g/m^2	4m/6m
KF-4	Common	31.5	13.5	0.90	≥275g/m^2	4m/6m

2/ LOCKUP® Swedged Galvanized Wiggle Wire Channel

Product Description

- Self-connecting with ends connection, 30% intensity improved at connecting point;
- Working efficiency improved 100%;
- Working with VINIPET® Wiggle Wire, it may stand 14 grades wind.

Model	Specification	Width(mm)	Height(mm)	Thickness(mm)	Zinc Coating	Length(m/pc)
KF-2AS	Swedged	28	10	0.60	≥120g/m^2	4050mm/6050mm
KF-3BS	Swedged	30	11	0.70	≥120g/m^2	4050mm/6050mm
KF-3BS	Swedged	30	11	0.70	≥275g/m^2	4050mm/6050mm
KF-4S	Swedged	31.5	13.5	0.90	≥275g/m^2	4050mm/6050mm

3/Two options for Wiggle Wire Channel Connecting

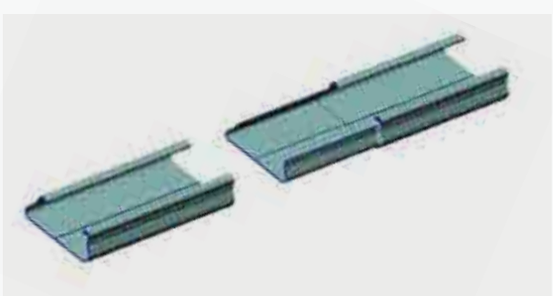

Swedged Ends Connecting

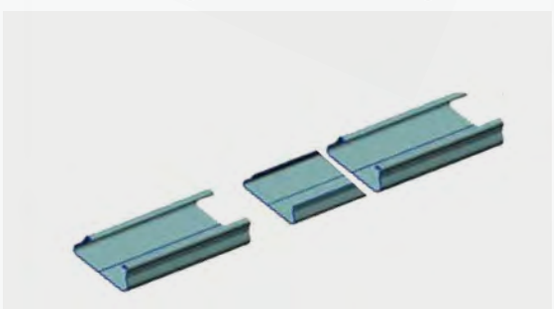

Wiggle Wire Channel Connector

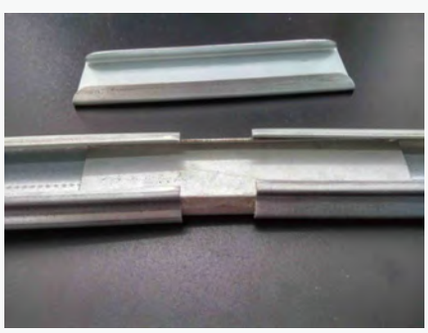

4/ LOCKUP® Aluminum Wiggle Wire Channel

A/Product Description

- “U” Shape Aluminum Wiggle Wire Channel;
- Strong anti-corrosion;
- May work with 2 pcs of wiggle wire.

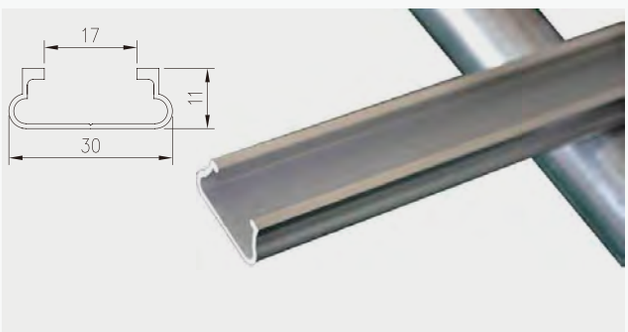

Model	Specification	Width(mm)	Height(mm)	Thickness(mm)	Length(m/pc)
KCL-UY	Common	30	11	0.80	3m/4m/6m
KCL-U	Common	30	11	0.80	3m/4m/5m

B/Product Description:

- KFA-4 Aluminum Wiggle Wire Channel;
- Strong anti-corrosion;
- May work with 3 pcs of wiggle wires.

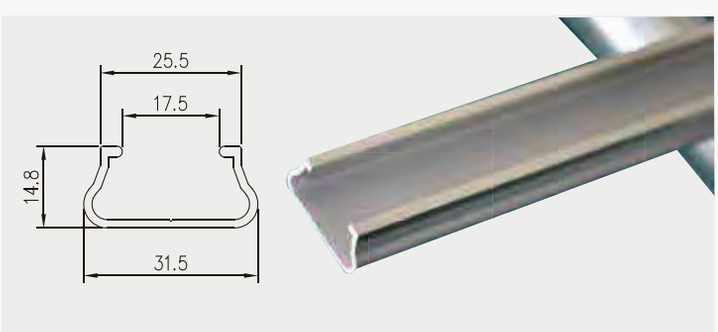

Model	Specification	Width(mm)	Height(mm)	Thickness(mm)	Length(m/pc)
KFA-4Y	Common	31.5	14.8	1.40	3m/4m/6m
KFA-4	Common	31.5	14.8	1.40	3m/4m/6m

5/LOCKUP® Wiggle Wire Channel Application Picture

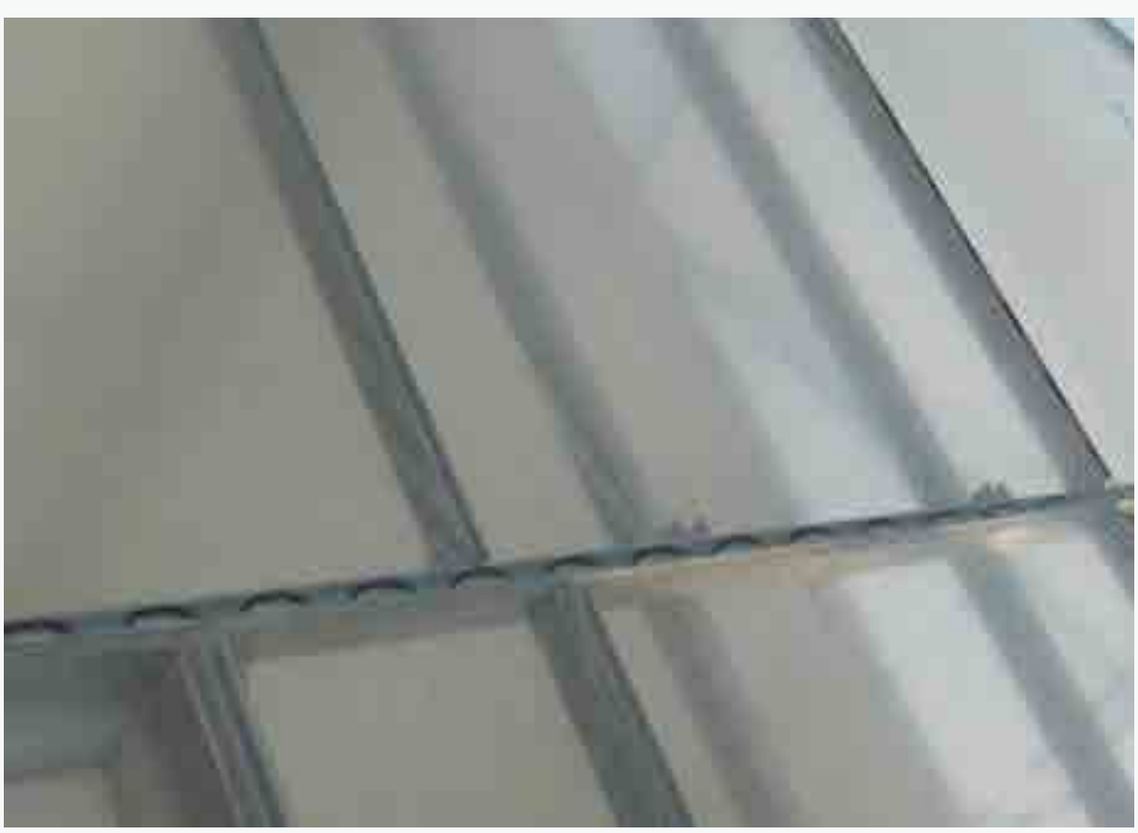

04

Greenhouse Ventilation and Shading

Ventilation and Curtaining System

1. Continuous Rack and Pinion Vent System
2. A Type Rack and Pinion Curtaining System
3. B Type Rack and Pinion Curtaining System

Kingzo® Gear Motor

1. 3GG® Gear Motor
2. Kingzo® Gear Motor for ventilation
3. Kingzo® Gear Motor for curtaining
4. Kingzo® Gear Motor dimension
5. Kingzo® Gear Motor installation diagram
6. 250W Kingzo® Gear Motor

Accessories for Ventilation and Curtaining System

1. Accessories for Continuous Rack and Pinion Vent System
2. Accessories for A Type Rack and Pinion Curtaining System
3. Accessories for B Type Rack and Pinion Curtaining System
4. Accessories for Cable Driving Shading System
5. Accessories for Economical Shading System
6. General Accessories for Curtaining System

Greenhouse Ventilation and Curtaining System

Installation Diagram

1/Continuous Rack and Pinion Vent System

Installation Diagram

- Continuous vent system consists of vent gear motor, drive shaft, rack and pinion and shaft bearing. The gear motor drives the pinion by the drive shaft to move the rack back and forward to open or close the vent.

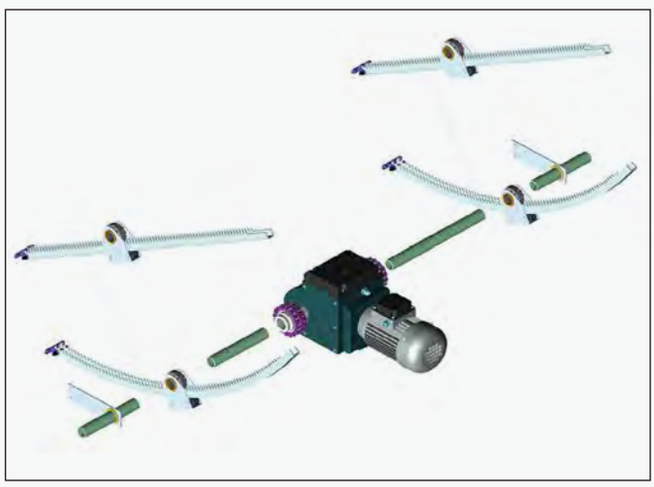

2/A Type Rack and Pinion Curtaining System

Installation Diagram

- A type rack and pinion curtaining system is widely used in interior and exterior shading system in multi span greenhouses; this system always has stable and reliable performance.
- Application:
  Interior and exterior shading system.

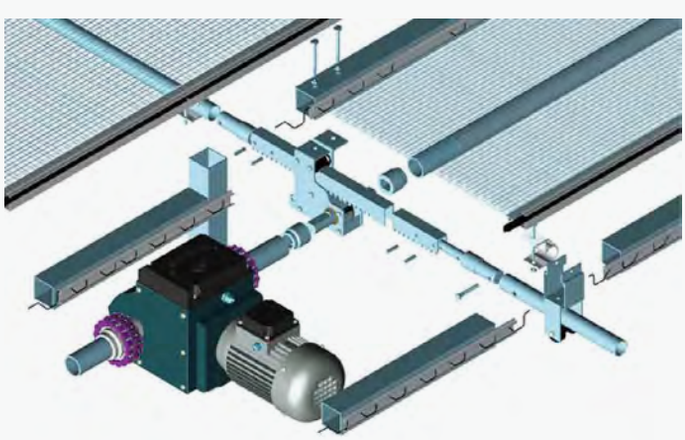

Working Principle:

Gear motor drives the pinion by the drive shaft to move the rack back and forward; the rack is connected with the handspike sitting on the supporting wheel, so the curtain movement is realized by reciprocating movement of the handspike to open or close the shading system.

3/B Type Rack and Pinion Curtaining System

Installation Diagram

- B type rack and pinion curtaining system is widely used in interior and exterior shading system in multi span greenhouses; this system always has stable and reliable performance.
- Application:
  Interior and exterior shading system.

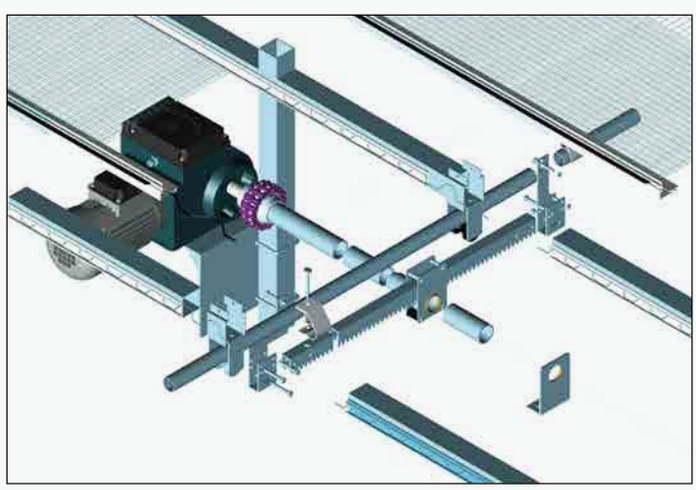

Working Principle:

Gear motor drives the pinion by the drive shaft to move the rack back and forward; the rack is connected with the handspike sitting on the supporting wheel, so the curtain movement is realized by reciprocating movement of the handspike to open or close the shading system.

4/Cable Driving Shading System

Installation Diagram

- Cable driving shading system is widely used in greenhouses and it is easy to install and cost efficient.

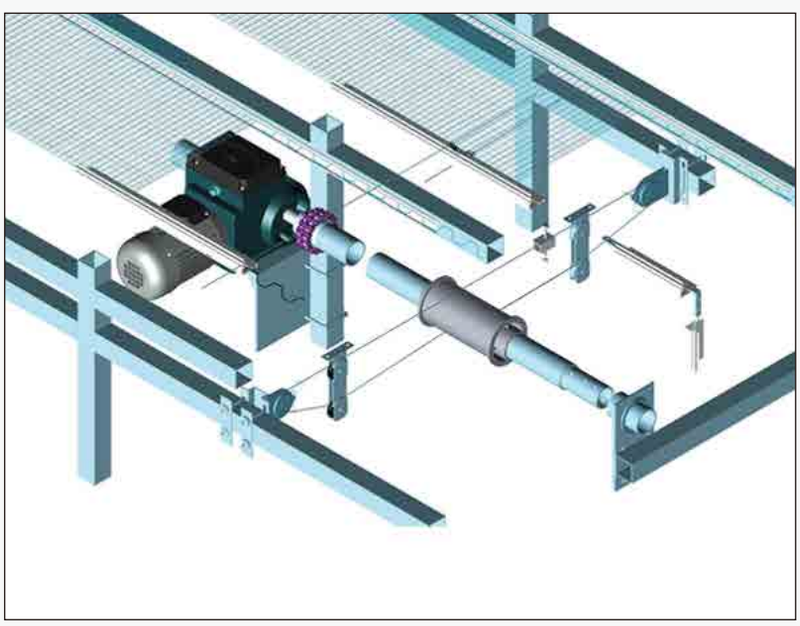

Working Principle:

Gear motor drives the driving shaft by the chain coupler; the cable is winded on the driving shaft or winding drum, therefore a closed cable circle is formed by the pulleys installed at the ends of the system. When the driving shaft rotates, the cable will wind from one end and unwind from the other end, therefore the cable will move in the closed circle. The cable will achieve back and forward movement by the gear motor. The shading net will open and close when fixed to the truss structure in one end while the other end fixed to the driving cable.

3GG® Gear Motor

1/ 3GG® Gear Motor

Product Description

- Self-locking performance is excellent, braking distance is less than 10mm;
- Limit control failure rate decrease to 0.5%;
- Additional overload protection and power phase loss protection function;
- Additional manual opening and closing device;
- 3 years quality guarantee.

Product Code	Model	Output Torque	Current	Power	Voltage	RPM	Max Limit Range	Brake Distance	Weight	Guarantee
110421000010	3GG-G3003	300N·m	1.9A	370W	AC380V±10%	2.6r/min	90r	≤10mm	20kg	3 years
110422000010	3GG-G3005	300N·m	1.9A	370W	AC380V±10%	5.2r/min	90r	≤10mm	20kg	3 years

Application Picture

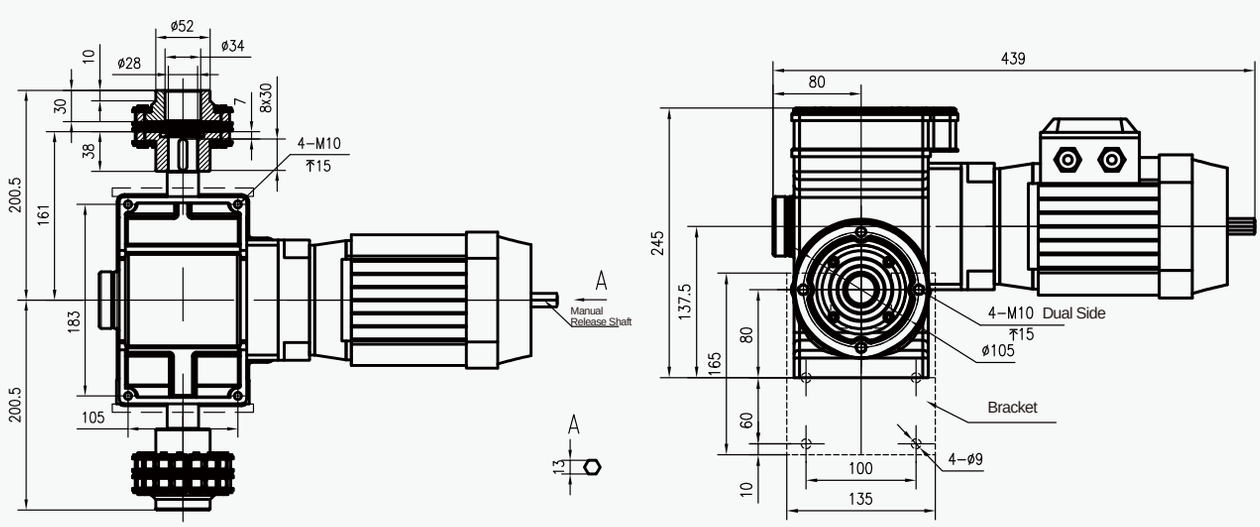

2/ 3GG® Gear Motor application for Venting System

3/ 3GG® Gear Motor application for Screening System

Kingzo® Gear Motor

Kingzo® Gear Motor for Ventilation and Curtaining

1/Kingzo® Gear Motor for Ventilation

Product Description

- Specialized for greenhouse vent open and close;
- Big torque capability;
- Wide range of usage;
- Stable performance, low failure rate;
- Accurate limit control;
- 3 years quality guarantee.

Product Code	Model	Voltage	Power	Torque	Current	RPM	Output Shaft Limit	Output Shaft Diameter	Connection Pipe Diameter	Weight	Guarantee
110407400010	GMA550-D-600-2.6	380V	0.55KW	600N.m	1.7A	2.6r/min	90r	Φ25	Φ34	24kg	3 years
110407300010	GMA750-D-800-2.6	380V	0.75KW	800N.m	2.2A	2.6r/min	90r	Φ25	Φ34	24kg	3 years

Application Picture

2/Kingzo® Gear Motor for Curtaining

Product Description

- Double output shaft, two sides working for screening system;
- Compact, reliable performance, easy to install and operate;
- Reliable performance of reverse self-locking with travel control device. It can be automatically controlled with the control system;
- 3 years quality guarantee.

Product Code	Model	Voltage	Power	Torque	Current	RPM	Output Shaft Limit	Output shaft Diameter	Connection Pipe Diameter	Weight	Guarantee
110407900010	GMA550-D-400-5.2	380V	0.55KW	400N.m	1.4A	5.2r/min	90r	Φ25	Φ34	24kg	3 years
110407600010	GMA750-D-600-5.2	380V	0.75KW	600N.m	1.8A	5.2r/min	90r	Φ25	Φ34	24kg	3 years

Application Picture

3/Model Naming Demostration

GMA-550-D-600-2.6

- GMA indicates series model
- 550 indicates 0.55 KW power
- D indicates double output shaft
- 600 indicates torque 600N.m
- 2.6 indicates speed of revolution 2.6 rpm

4/Kingzo® Gear Motor Dimension

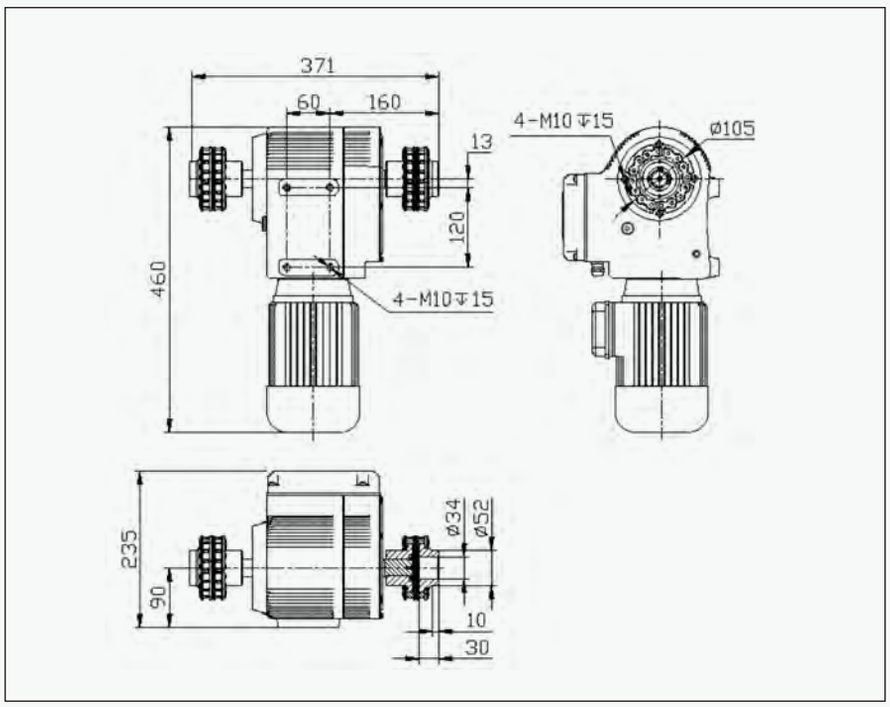

5/Kingzo® Gear Motor Installation Diagram

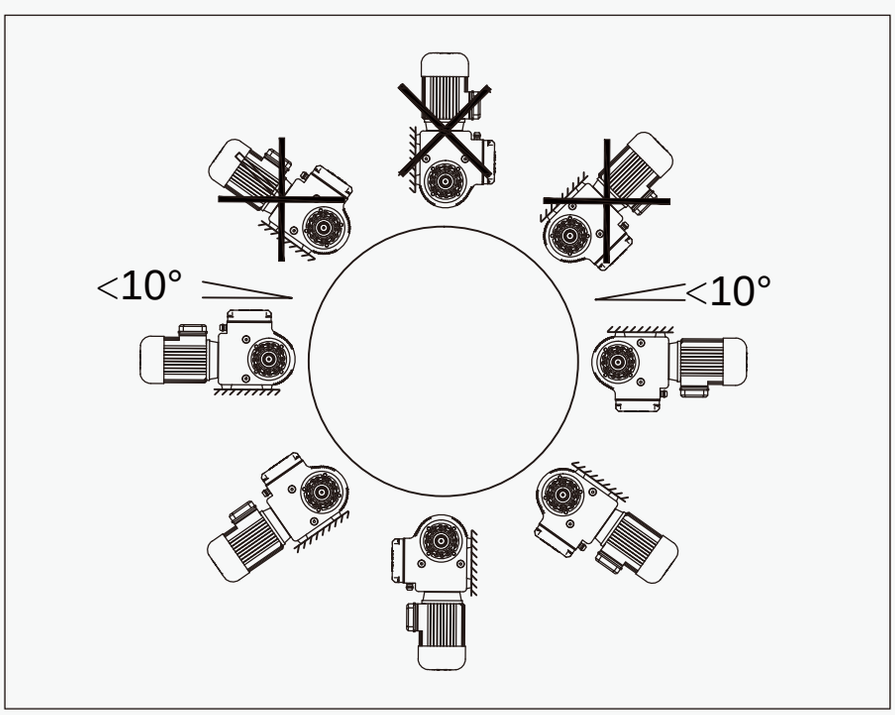

Note: X denotes forbidden installation angle.

Kingzo® Gear Motor

250W Gear Motor

1/250W Gear Motor

Products Description

- Compact, reliable performance;
- Easy to install and operate;
- Reliable performance of reverse self-locking with travel control device;
- 3 years quality guarantee.

Product Code	Model	Voltage	Power	Torque	Current	RPM	Output Shaft Limit	Output shaft Diameter	Connection Pipe Diameter	Weight	Guarantee
110407800010	GMA250-D-220-S	220V	0.25KW	260N.m	1.75A	3.7r/min	40r	Φ22	Φ34	11.7kg	3 years
110407700010	GMA250-D-380-S	380V	0.25KW	260N.m	0.83A	3.7r/min	40r	Φ22	Φ34	11.7kg	3 years

Limit Switch Diagram

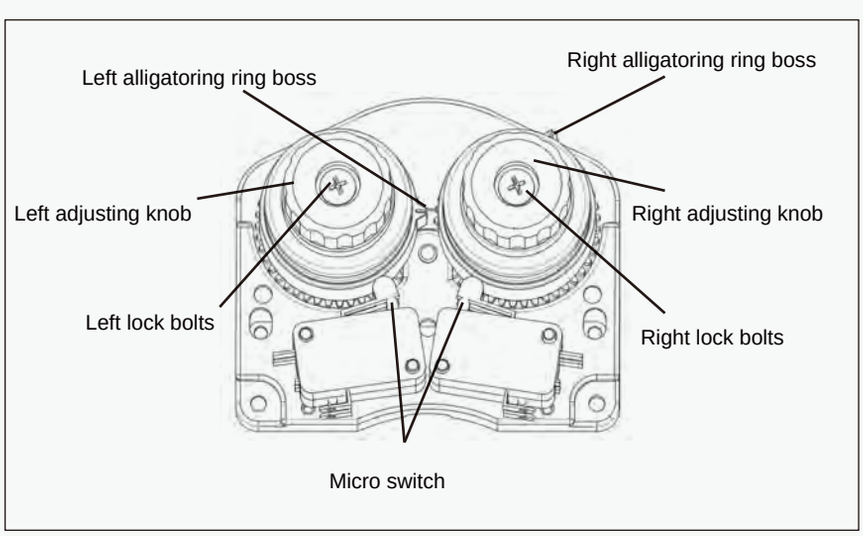

Note:Before adjusting, please loosen the lock bolts. After adjusting, please fasten the lock bolts.

Note:After adjusting, please DO fasten the lock bolts, or the limit will not be accurate and there would be danger of electricity leakage.

Greenhouse Ventilation and Shading

Accessories

1/Continuous Rack and Pinion Vent System

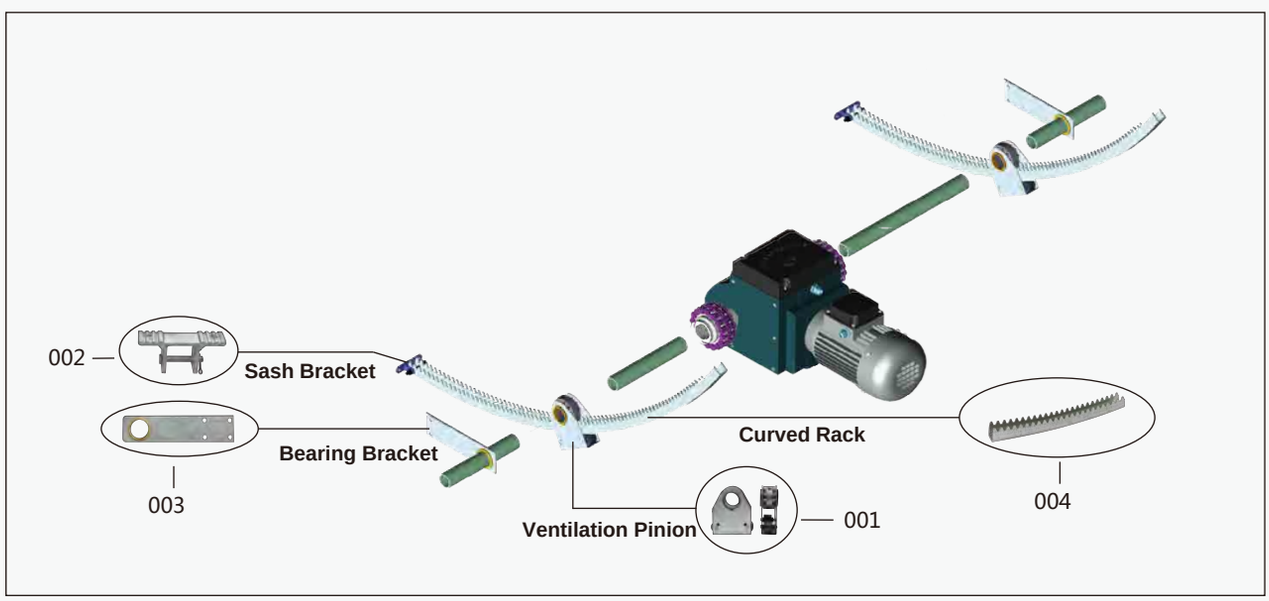

1/001 Ventilation Pinion

1'' Powder Metallurgy Pinion with Bronze Insert

1'' Stainless Steel Pinion with Bronze Insert

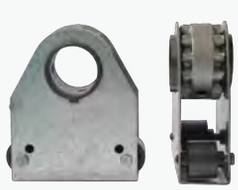

1'' Powder Metallurgy Pinion with Nylon Insert

Product Code	Model	Specs	Height	Unit
130300400030	CLKC—ATF1—30	1'' Powder Metallurgy Pinion with Bronze Insert	30mm	piece
130300100030	CLKC—ATB1—30	1'' Stainless Steel Pinion with Bronze Insert	30mm	piece
130300200030	CLKC—ANF1—30	1'' Powder Metallurgy Pinion with Nylon Insert	30mm	piece

Note:Pinion frame is made of galvanized steel sheet; mesh with rack is accurate, small noise and reliable performance.

1/002 Sash Bracket

Note: Used for the connection of rack and vent frame.

Product Code	Model	Unit
130900600030	XMZ-LZ	set

1/003 Bearing Bracket

1'' bronze insert, straight

5/4'' bronze insert, straight

Product Code	Model	Specs	Unit
140200800030	SSP-31-1	1'' bronze insert, straight	piece
140200900030	SSP-31-2	5/4'' bronze insert, straight	piece

Note: Used for supporting the driving shaft.

1/004 Curved Rack

Product Code	Model	Length	Thickness	Height	Unit
130408100030	CTKH-2.0301050	1050mm	2.0mm	30mm	piece
130408200030	CTKH-2.0301250	1250mm	2.0mm	30mm	piece
130410100030	CTKH-2.5301050	1050mm	2.5mm	30mm	piece
130414200030	CTKH-3.0301250	1250mm	3.0mm	30mm	piece

Note: Other length could be custom made on request.

2/A Type Rack and Pinion Curtaining System

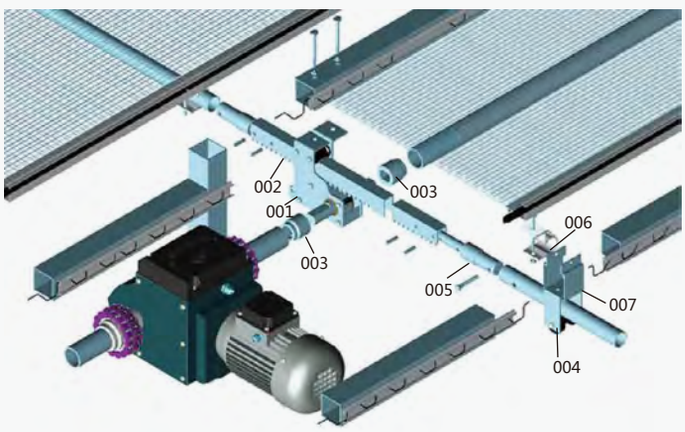

001. A type curtaining pinion
002. Rack arm
003. Welding joint
004. Coupling connector
005. Table clamp
006. Supporting wheel
007. Clamp for supporting wheel

2/001 A Type Curtaining Pinion

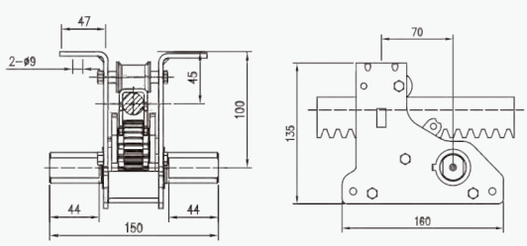

Product Code	Product	Specs	Unit
140501100030	A type curtaining pinion	Steel Triple Gears	piece

2/002 Rack Arm

Product Code	Model	Length	Thickness	Unit
140600100030	CTLM-2.752965	L=2965	2.75mm	piece
140600200030	CTLM-2.753965	L=3965	2.75mm	piece
140600300030	CTLM-2.754965	L=4965	2.75mm	piece
140600700030	CTLM-3.02965	L=2965	3.0mm	piece
140600800030	CTLM-3.03965	L=3965	3.0mm	piece
140600900030	CTLM-3.04965	L=4965	3.0mm	piece

Note: Other length could be tailor made on request.

2/003 Welding Joint

Product Code	Model	Specs	Unit
141107300430	HHJT-ZT	1″、5/4″ General use, cold extrusion	piece

Note: Used for the connection of A type curtaining pinion and drive shaft.

2/004 Supporting Wheel

Product Code	Model	Unit
141101500030	SSP-63	piece

Note: Used for supporting the handspike. It needs U clamp or bolt to fix.

2/005 Coupling Connector

Product Code	Model	Specs	Unit
141107100030	LMCTJT-27	Φ27	piece
141107200030	LMCTJT-32	Φ32	piece

Note: Used for the connection of rack and handspike in A type rack and pinion curtaining system.

2/006 Table Clamp

Product Code	Model	Specs	Unit
141103100030	SSP-11-27	Φ 27	piece
141103200030	SSP-11-32	Φ 32	piece

2/007 Clamps for Supporting Wheel

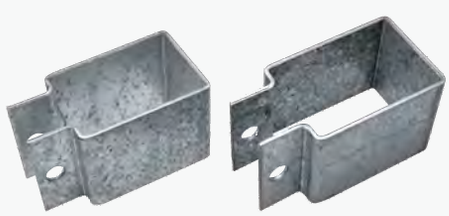

Product Code	Model	Specs	Unit
141105100030	GLBG-6040	60*40(Vertical)	piece
141105300030	GLBG-5050	50*50	piece
141105200030	GLBG-4060	40*60(Horizontal)	piece
141105400030	GLBG-4040	40*40	piece

2/008 Washer

Product Code	Model	Unit
140500500030	DP-A45	set

Note: Used for A type curtaining pinion.

2/009 Anti-slip Clip

Product Code	Model	Specs	Unit
140500600030	KJ-A	For A type pinion	piece

Note: Used for installation on input shaft of A type pinion for convenience of shaft install and dismantle.

2/010 Supporting Wheel

SSP-56

SSP-60

SSP-61

Product Code	Model	Unit
141101100030	SSP-56	piece
141101300030	SSP-60	piece
141101400030	SSP-61	piece

Note: Used for supporting 27, 32 handspike, no clamp is needed.

2/011 PE Woven Fabric

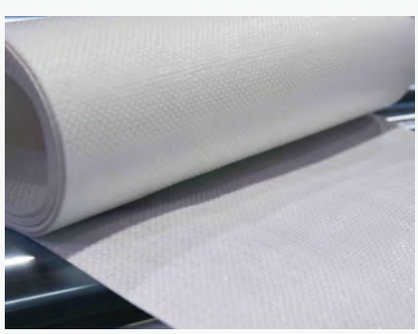

Product Code	Material	Mesh	Weight
640102700030	PE	12×12	330g/sqm
Line width	**Line weight**	**Glossiness**	**Unit**
4mm	1850D	matte	m^2

3/B Type Rack and Pinion Curtaining System

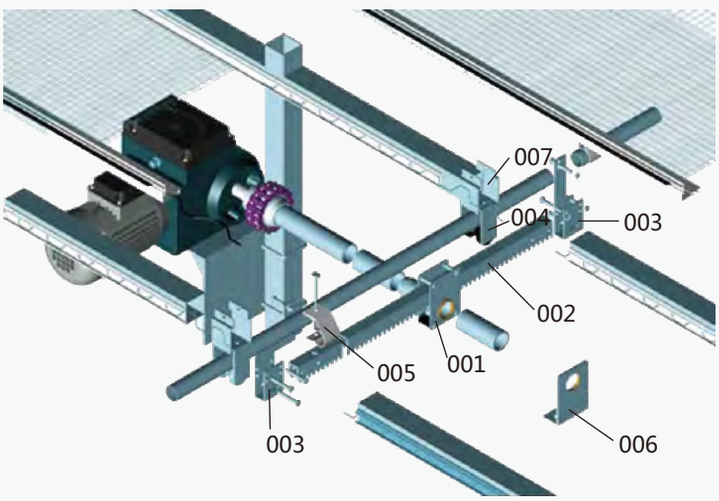

001. B type curtain pinion
002. Rack arm
003. Rack connector
004. Supporting wheel
005. Table clamp
006. Shaft supporter
007. Clamp for supporting wheel

3/001 B Type Curtain Pinion

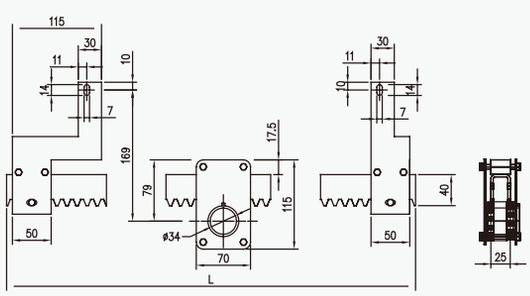

Product Code	Name	Model	Specs	Unit
140500300030	B type curtain pinion	CLLM-B1	1”shaft	piece
140500400030	B type curtain pinion	CLLM-B1.2	5/4”shaft	piece

3/002 Rack Arm

Product Code	Model	Length	Thickness	Unit
140600100030	CTLM-2.752965	L=2965	2.75mm	piece
140600200030	CTLM-2.753965	L=3965	2.75mm	piece
140600300030	CTLM-2.754965	L=4965	2.75mm	piece
140600700030	CTLM-3.02965	L=2965	3.0mm	piece
140600800030	CTLM-3.03965	L=3965	3.0mm	piece
140600900030	CTLM-3.04965	L=4965	3.0mm	piece

Note: Other length could be tailor made on request.

3/003 Rack Connector for B Type Curtaining System

Product Code	Model	Specs	Unit
141107300030	SSP-28	B type pinion,4pcs/kit set	set

Note: Used for connection with rack and handspike.

3/004 Supporting Wheel

Product Code	Model	Unit
141101500030	SSP-63	piece

Note: Used for supporting the handspike.
It needs U clamp or bolt to fix.

3/005 Table Clamp

Product Code	Model	Unit
141103100030	Φ 27	piece
141103200030	Φ 32	piece

3/006 Shaft Supporter

1'' bronze insert

5/4'' bronze insert

1'' nylon insert

Product Code	Model	Specs	Unit
140200800030	SSP-31-1	1'' bronze insert, straight	piece
140200900030	SSP-31-2	5/4'' bronze insert, straight	piece
140200100030	SSP-21-1	1'' shaft, nylon insert, 2 pcs	piece

Note: Used for holding shaft, good anti-friction capability, long life.

3/007 Clamps for Supporting Wheel

Product Code	Model	Specs	Unit
141105100030	GLBG-6040	60*40 (Vertical)	piece
141105300030	GLBG-5050	50*50	piece
141105200030	GLBG-4060	40*60 (Horizontal)	piece
141105400030	GLBG-4040	40*40	piece

3/008 Supporting Wheel

SSP-56

SSP-60

SSP-61

Product Code	Model	Unit
141101100030	SSP-56	piece
141101300030	SSP-60	piece
141101400030	SSP-61	piece

Note: Specially used for supporting 27, 32 handspike, no clamp is needed.

4/Accessories For Cable Driving Shading System

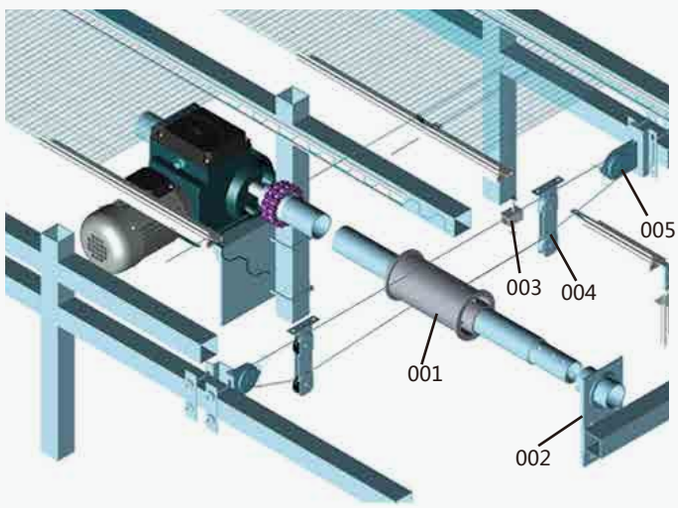

001. Winding drum
002. Bearing plate
003. Aluminum drive clip
004. Suspension wheel
005. Reversal Pulley

4/001 Metal Winding Drum/Plastic Winding Drum

Made of galvanized steel, used for 2'' shaft, 3 pcs of screws

Used for 1'' shaft, used for small area of curtaining system.

Product Code	Model	Specs	Unit
141001200030	RXT-70	Φ70x120	piece
141001000030	SSP-76-1	Φ32,4m	piece
141001100030	SSP-76-2	Φ32,6m	piece

4/002 Bearing Plate

Product Code	Model	Specs	Unit
140200100030	SSP-21-1	1“ Nylon bearing, 2 splints	piece
140200200030	SSP-21-2	2“ Nylon bearing, 2 splints	piece

Note: Used for supporting the drive shaft.

4/003 Aluminum Drive Clip

Product Code	Model	Specs	Unit
141005400030	SSP-10	L=30	piece

Note: Made of aluminum alloy material, used for connecting cable and the leading edge profile.

4/004 Suspension Wheel

Product Code	Model	Specs	Unit
141004200030	SSP-68	Double wheel	piece

Note: Used for guiding driving cable.

4/005 Reversal Pulley

Product Code	Name	Unit
141003100030	Reversal pulley	piece

Note: Used for the reversal of the driving cable.

4/006 Cone Winding Drum

Product Code	Model	Specs	Unit
640100100430	Cone winding drum(6”)	3/4”	piece

Note: Used for livestock house.

4/007 Bearing Plate

Product Code	Model	Specs	Unit
140200300030	SSP-22-1	1”	piece
140200400030	SSP-22-2	2”	piece

Product Code	Model	Specs	Unit
140200500030	SSP-23-1	1”	piece
140200600030	SSP-23-2	2”	piece

Note: In the shading system, supporting the drive shaft, it can distribute shaft torque and reduce load of drive shaft.

5/Economical Shading System

5/001 Aluminum Pipe

Product Code	Model	Specs	Unit
140400900030	QDLG-19x1.2Y	Φ19x1.2mm	m

Note: It could replace the leading edge profile, cost efficient and durable.

5/002 Plastic Connector

Product Code	Model	Specs	Unit
140410600030	SSP-19	Φ19	set

5/003 Plastic Screen Folder

Product Code	Model	Specs	Unit
140901000030	SSP-32	Φ19	piece

Note: Used for working with the pipe, fixing the shading net.

5/004 Steel Screen Folder

Product Code	Model	Specs	Unit
140901100030	SSP-33	Φ19	piece

Note: Made of high flexible stainless steel, no distortion.

5/005 Screen Clip

Product Code	Model	Specs	Unit
140901800030	SSP-42	Φ19	piece

Note: Used for fixing the shading nets to 19mm pipe.

5/006 Plastic Screen Clip

Product Code	Model	Specs	Unit
140902100030	SSP-46	Φ19	piece
140902000030	SSP-47	Φ19	piece

Note: Used for fixing the shading nets to 19mm pipe and polyester wire.

5/007 Stainless Steel Clamp

Product Code	Model	Specs	Unit
770100400030	SSP-80-1	Φ19,13mm	piece
770100500030	SSP-80-2	Φ19,38mm	piece

Note: Used for fixing the shading nets to 19mm pipe and polyester wire.

5/008 Double Screen Clip

Product Code	Model	Specs	Unit
140901900030	SSP-43	Φ19	piece

Note: Used for fixing the driving cable to the pipe.

5/009 Tube Clamp With Screwing

Product Code	Model	Specs	Unit
141005500030	SSP-44	Φ19	piece

Note: Used for fixing the driving cable to the pipe.

5/010 Screen Stopper

Product Code	Model	Specs	Unit
140901200030	SSP-34	stainless steel	piece

Note: Used with truss clamps, stainless steel material,high flexible.

5/011 Aluminum Saddle Clamp

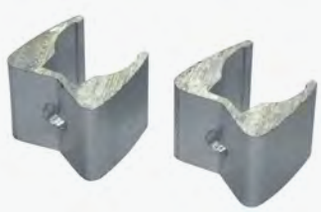

Product Code	Model	Specs	Unit
140902300030	SSP-09	Φ19,L=21	piece

Note: Used for working with the aluminum drive clip or the table clamp.

5/012 Aluminum Shading Screen(Energy Savimg)

High tensile strength, strong resistant to UV radiation, anti-corrosion, anti-aging.

Product Code	Model	Shading Rate	Unit
140300100030	NL45	45%	m^2
140300200030	NL55	55%	m^2
140300300030	NL65	65%	m^2
140300400030	NL75	75%	m^2
140300500030	NL85	85%	m^2
140300600030	NL99	99%	m^2

5/013 Aluminum Shading Screen(Vent Type)

High tensile strength, strong resistant to UV radiation, anti-corrosion, anti-aging.

Product Code	Model	Shading Rate	Unit
140301100030	NL55	55%	m^2
140301200030	NL65	65%	m^2
140301300030	NL75	75%	m^2
140301400030	NL85	85%	m^2
140301500030	NL99	99%	m^2

5/014 Plastic Exterior Shading Screen

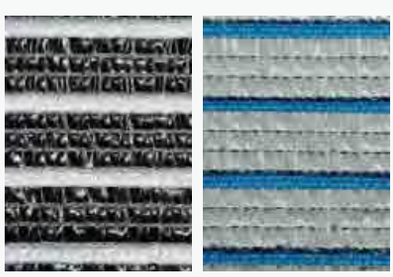

Polyolefin screen (outside layer is white color, and inside layer is black color), vent structure, white surface can reflect solar radiation. Vent structure is to maximize the ventilation.

Product Code	Model	Shading Rate	Unit
140302400030	HBM55	55%	m^2
140302500030	HBM65	65%	m^2
140302600030	HBM75	75%	m^2
140302700030	HBM85	85%	m^2
140302800030	HBM99	99%	m^2

5/015 Black Knitted Screen (Round Thread)

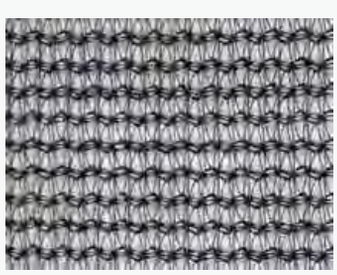

High tensile strength, anti-aging, long life cycle.

Product Code	Model	Shading Rate	Unit
140301600030	WS50	50%	m^2
140301700030	WS60	60%	m^2
140301800030	WS70	70%	m^2
140301900030	WS80	80%	m^2

6/General Accessories for Curtaining System

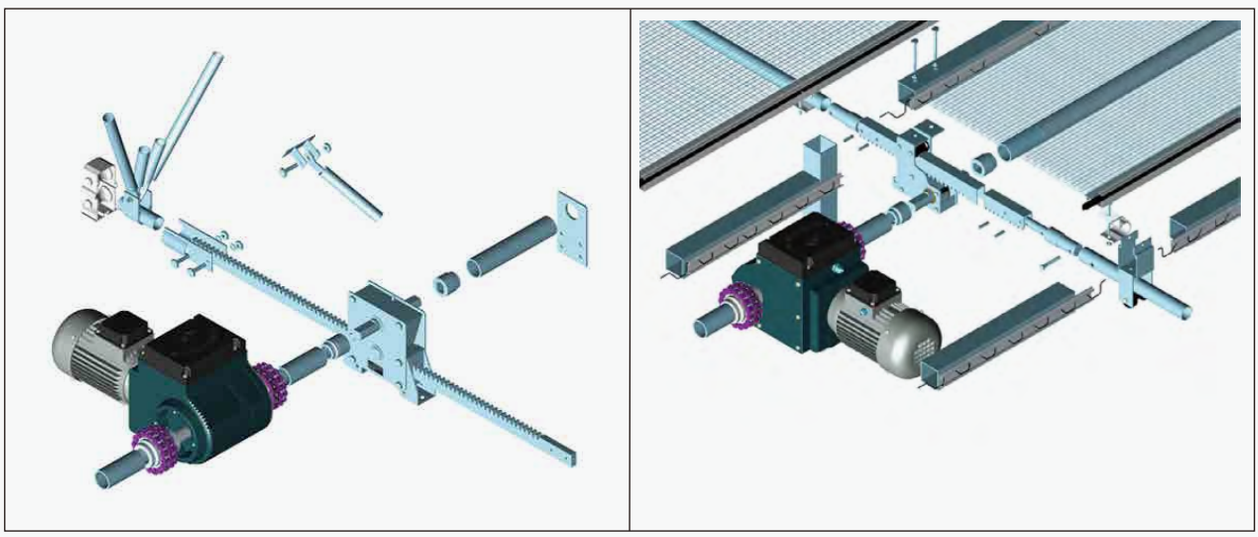

6/001 Shading Net Weight

Product Code	Model	Specs	Unit
140801700130	YPZ-503	Φ50	set

Note: Used as balance weight on the edge of shading nets, wind proof.

6/002 Fixing Spring(interior use)

Product Code	Model	Unit
140900100030	DWH-N	piece

Note: Used for guiding polyester wire on leading edge I, V.

6/003 Plastic Peg

Product Code	Model	Unit
140802300030	SSP-53	piece

Note: Used for working with steel wire and shading net.

6/004 S Screen Hook

Product Code	Model	Unit
140801900030	SSP-36	piece

Note: Connecting the edge of shading net to the wire.

6/005 S Hook

Product Code	Model	Unit
140802000030	SSP-37	piece

Note: Connecting the edge of shading net to the wire.

6/006 Polyester Wire

Product Code	Model	Name	Clor	Dia	Specs	Unit
140800600030	SSP-70-1	Polyester wire	Black	Φ2.2	1900m/roll	roll
140800500030	SSP-70-2	Polyester wire	clear	Φ2.0	2300m/roll	roll
140803600030	SSP-70-4	Polyester wire	clear	Φ2.3	2300m/roll	roll

Note: Used for shading system to hold and cover the shading nets, made of polyester, strong tensile strength, long life span.

6/007 T Bolts

Product Code	Specs	Unit
140802600030	M6*75	piece
140802500030	M6*40	piece

Note: For greenhouse use.

05

Greenhouse Ventilation Products

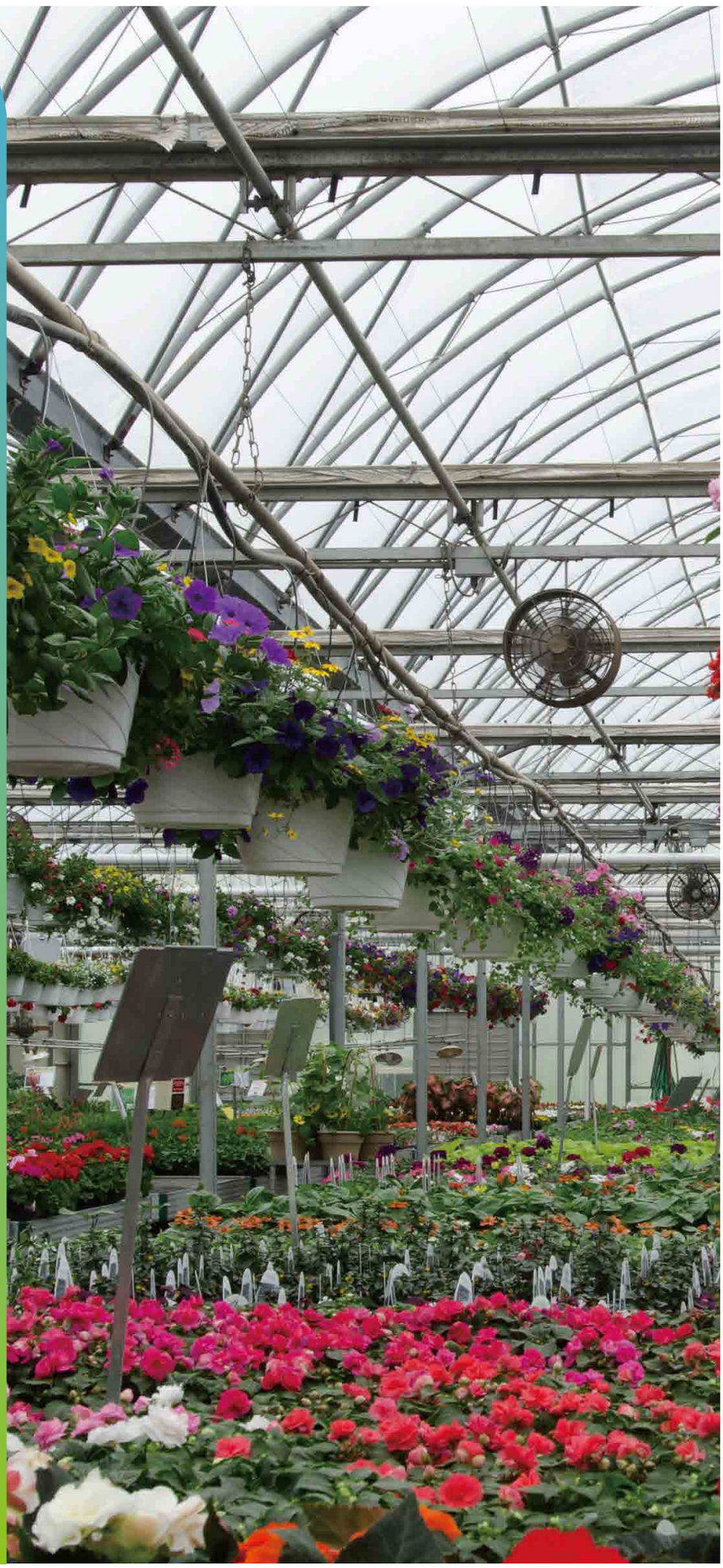

KOOL MAX® Easy Wind

1. KOOL MAX® Electric Easy Wind
2. KOOL MAX® Manual Easy Wind
3. KOOL MAX® Electric Easy Wind for Livestock

FLC® Circulation Fan

1. FLC® ZLFJ460 Circulation Fan
2. FLC® ZLFJ Stainless Steel Circulation Fan

FLC®Inflation Blower

1. FLC® Centrifugal Inflation Blower
2. FLC® 95B-1 Centrifugal Inflation Blower
3. FLC® Centrifugal Inflation Blower Accessories

Greenhouse Ventilation Products

KOOL MAX® Easy Wind

1/KOOL MAX® Electric Easy Wind ST-PQD/DD-400

Product Description

- Faster cooling, excellent dehumidification performance;
- Excellent forced ventilation performance;
- Rain leak-proof design;
- Anti-aging, durable using life;
- Convenient installation, firm and reliable;
- 3 years quality guarantee.

Product Code	Model	Air Flow	Blade Diameter	RPM	Frequency	Voltage	Current	Power	Weight	Guarantee
250600500030	ST-PQD/DD-400	4600m³/h	390mm	1390r/min	50Hz	220V	0.9A	200W	7.5kg	3 years

KOOL MAX® Electric Easy Wind Application

2/KOOL MAX® Manual Easy Wind ST-PQD/SD

Product Description

- Faster cooling, excellent dehumidification performance;
- Excellent forced ventilation performance;
- Rain leak-proof design;
- Anti-aging, durable life;
- Convenient installation, firm and reliable;
- 3 years quality guarantee.

Product Code	Model	Outlet Diameter	Inlet Diameter	Installation Position	Height	Weight	Warranty
250600100030	ST-PQD/SD	410mm	480mm	527mm	280mm	2.3kg	3 years

KOOL MAX® Manual Easy Wind Application

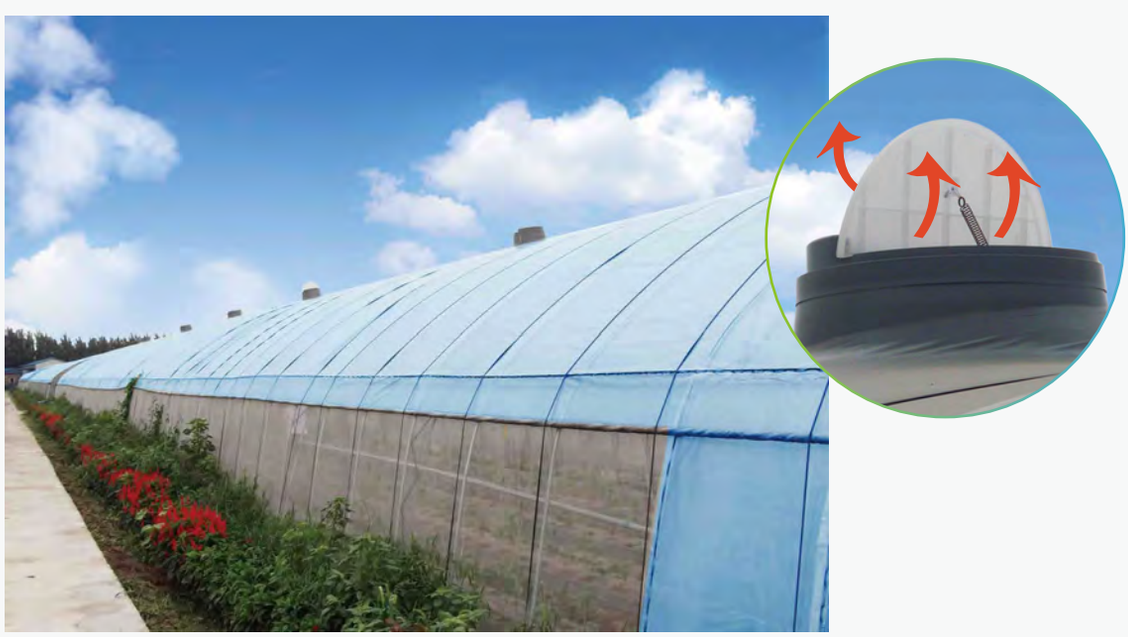

3/KOOL MAX® Livestock use Electric Easy Wind XM-PQD/DD

Product Description

- Faster cooling, excellent dehumidification performance;
- Excellent forced ventilation performance;
- Rain leak-proof design;
- Anti-aging, durable using life;
- Convenient installation, firm and reliable;
- Inverted taper design, firm and reliable;
- 3 years quality guarantee.

Product Code	Specs	Air Flow	Blade Diameter	RPM	Frequency	Voltage	Current	Power	Weight	Guarantee
250600300030	XM-PQD/DD	4600m³/h	390mm	1390r/min	50Hz	220V	0.9A	200W	9.0kg	3 years

KOOL MAX® Livestock Use Electric Easy Wind Application

Greenhouse Ventilation Products

FLC® Circulation Fan

1/FLC® ZLFJ460 Circulation Fan

Product Description

- Motor with overheating protection;
- Convenient installation and long span life;
- Plastic coated galvanized plate, excellent anticorrosion;
- Blades with large angle imitation vortex long tail, stable running, air throwing max 45 meters;
- 3 years quality guarantee.

Product Code	Model	Nominal Voltage	Rated Power	Effective Range	Frequency	RPM	Air Flow	Overheating Protection	Guarantee
280500100010	ZLFJ460	220V	235W	45m	50Hz	1400r/min	5500m³/h	115℃	3 years

FLC® Circulation Fan Application

2/FLC® ZLFJ Stainless Steel Circulation Fan

Product Description

- Stainless steel casing, longer Air duct, big air flowing, good directivity, long life span;
- Stable running, low noise, low power consumption, nice appearance;
- 3 years quality guarantee.

Product Code	Model	Nominal Voltage	Rated Power	Frequency	RPM	Air Flow	Weight	Guarantee
280100200010	ZLFJ400-22050Y	220V	145W	50Hz	1400r/min	2880m³/h	8.75kg	3 years
280300900010	ZLFJ500-22050	220V	350W	50Hz	1400r/min	5700m³/h	12.4kg	3 years

FLC® Circulation Fan Application

Since the Greenhouse is a relative close environment , the air in the greenhouse is not easy to flow , and the temperature and humidity in the greenhouse air normally high. It can easily breed various pests and diseases in such an environment. In order to improve the environment inside and keep the air in the greenhouse flowing, Beijing Fenglong meticulously designed and producted the FLC® circulation fan.

Greenhouse Ventilation Products

FLC® Inflation Blower

1/FLC® Centrifugal Inflation Blower

Product Description

- The product is composed of the turbo, the propeller and low noise motor etc;
- The propeller is designed as multi winged, insulation Protection IP45;
- Stable performance, low noise, big air flow capability;
- Compact and easy to repair;
- Thermal protector built in;
- Adopting oil retaining roller bearing;
- CCC and CE certified;
- Motor frequency 50Hz;
- 3 years quality guarantee.

FLC® Centrifugal Inflation Blower Product Photo and Parameter

FLC-LCF/140A

FLC-LCF/140

Product code	Model	Air Flow	RPM	Frequency	Voltage	Electricity Current	Power	Thermal Protection	Adjustable Pressure Range	Unit
160100800010	FLC-LCF/140A	310m³/h	2190r/min	50Hz	220V	0.5A	70W	yes	50-200Pa	piece
160100400010	FLC-LCF/140	310m³/h	2190r/min	50Hz	220V	0.5A	70W	yes	/	piece

Note: Inflatable area of about 800m², inflation pressure between film is appropriate at 80Pa .

2/FLC® 95B-1 Centrifugal Inflation Blower

Product Description

- Environment Temperature≤55℃, Insulation Grade B, Insulation Protection IP45;
- Stable performance, low noise, big air flow capability;
- Thermal protector built in;
- Adopting oil retaining roller bearing;
- 20000 hours long continuous working life;
- CE certified;
- 3 years quality guarantee.

Product code	Model	Air Flow	RPM	Frequency	Voltage	Electricity Current	Power	Weight	Thermal Protection	Unit
160100100010	FLC-LCF/95B-1	150m³/h	2350r/min	50/60Hz	220V	0.19/0.23A	12W	1.5kg	yes	piece

Note: Inflatable area of about 400m², inflation pressure between film is appropriate at 80Pa.

3/FLC® Centrifugal Inflation Blower Accessories

Product code	Model	Unit
160200600010	CQFJPJ-LXZ-140A	set

Accessories include Air inlet 1, Air inlet 3, Air inlet 4,Φ76A Aluminum hose 1.5meters, 1 installation bracket, Metal hose clams, Bolts and nuts.

Product code	Model	Unit
160200900010	CQFJPJ-LXZ	set

Accessories include Air inlet 1, Air inlet 2, Φ76A Aluminum hose 1.5meters, 1 installation bracket, Metal hose clams, Bolts and nuts.

06

Other Greenhouse Accessories

Greenhouse Special Accessories

Other Greenhouse Accessories

Greenhouse Special Accessories

1/Sulfur Vaporator

The body of product is made of stainless steel.Due to the heater is controlled exactly at the constant temperature, therefore there is no sulfur burning of harmless gas occurring.

Product Code	Voltage	Power	Frequency	Temperature	Material	Specification	Weight	Unit
230200100030	120V/180-240V	60W	60/50Hz	5-30℃	Stainless steel	Φ13×200mm	0.65kg	set

2/Insect Net

Made of UV stabilized PE, with high tensile strength.

Product Code	Specification	Width	Unit
230500000030	Mesh 25×25	1m/1.5m/2m	m^2
230504000030	Mesh 40×40	1m/1.5m/2m	m^2
230500000030	Mesh 25×25	1m/1.5m/2m	m^2
230504000030	Mesh 40×40	1m/1.5m/2m	m^2

3/Bench

Product Code	Model	Name	Unit
230400103130	MC-BK-6000	Aluminum extrusion for side frame	set
230400100130	MC-SL-48	Handwheel	set

Other Greenhouse Accessories

Greenhouse Special Accessories

1/Patch Tape

Product Code	Model	Specification	Unit
100500100050	BMJD-7015	70mmx15m	roll
100500200050	BMJD-10015	100mmx15m	roll

Note: Widely used on EVA film, PE film, PVC film etc. to fix the damages of agriculture film. It is highly adhesive and water proof. It has high light transmission.

2/Brace Band

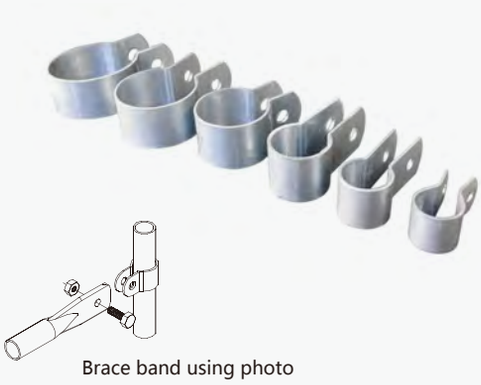

Brace band using photo

Product Code	Model	Material	Specs	Thickness	Unit
240800100030	YKG-2212	Hot galvanized	Φ22	1.2mm	piece
240800200030	YKG-2515	Hot galvanized	Φ25	1.5mm	piece
240800800030	YKG-3220	Hot galvanized	Φ32	2.0mm	piece
240800700030	YKG-6020	Hot galvanized	Φ60	2.0mm	piece

Note: Used for connecting with the round pipe.

3/Pipe Strap

Product Code	Model	Specification	Thickness	Unit
240802100030	BYKG-25	Φ25	1.2mm	piece
240802200030	BYKG-32	Φ32	1.5mm	piece
240802300030	BYKG-50	Φ50	2.0mm	piece

Note: Used for connecting to the pipes.

4/Single Groove Tube and Coupling

Single Groove Tube

Coupling

Product Code	Name	Model	Specs
130601700030	Single Groove Tube	JMG-DCY-3000	Φ50
130601000030	Coupling	LJJ-DCJMG	L=250

Note: The Single groove tube is used to roll plastics, screen and soft material;
The coupling is used to extend and connect the tube.

5/Double Grooves Tube and Coupling

Double Grooves Tube

Coupling

Product Code	Name	Model	Specs
130600600030	Double Grooves tube	JMG-SCY-6000	Φ50
130601200030	Coupling	LJJ-SCJMG	L=250

Note: The Double grooves tube is used to roll plastics, screen and soft material;
The coupling is used to extend and connect the tube.

6/Greenhouse Band (Webbing Rope)

Product Code	Model	Specs	Unit
120700200050	YMX-3H	300m/roll	roll

Note: Tensile strength, low thermal expansion and contraction coefficient, add anti-aging additives, longlife span.

7/T Clamp

(Used for junction of round pipes)

Product Code	Model	Specs	Unit
240805100030	TXQ-48	Φ48xΦ48	set

8/Wiggle Wire Channel Connector

Product Code	Model	Specs	Unit
120230100010	NJP-2	KF-2	piece
120230200010	NJP-3	KF-3	piece
120230300010	NJP-4	KF-4	piece

Note: Used for connecting LOCKUP® galvanized wiggle wire channel.

9/Film Hoop

Product Code	Model	Specs	Unit
120800100030	SSP-15-22	Φ22	piece
120800200030	SSP-15-25	Φ25	piece
120800300030	SSP-15-32	Φ32	piece